OCTOBER 29, 2007
ADDENDA NUMBER: 1
BID NUMBER: RFB2008-067-CM
TITLE: WATER METER BOXES AND COVERS

Change technical specifications to the following:

ACKNOWLEDGED AND RETURNED: WITH BID:_____ BY LETTER: :_____

SIGNATURE	PRINTED NAME	TITLE	COMPANY

TECHNICAL SPECIFICATION FOR STANDARD WUA WATER METER BOX

The following specification describes the minimum requirements acceptable for Water Meter Boxes, Extensions, Covers, and Lids:

Definitions:

Meter Box – The portion of the Water Meter Box assembly that is to be buried underground to house the Water Meter/Meters and curb stop.

Cover – The top of the Water Meter Box assembly that is above ground and is seen by the public and identifies the interested party that this is a Water Utility Authority (WUA) water meter. The top of the cover is flush with the surrounding surface.

Lid - The "meter reader lid" is at the center or near the center of the cover to the Water Meter Box assembly. It may be round or rectangular and is easily removable or useable.

Extension – The meter box extension is a riser that extends the effective depth of the meter box by 6" or more, by adding on to or extending the side walls of the box, generally referred to as stacking.

Light Duty – (LD) Meter Box assembly covers that are located in sidewalks, yards and paved pedestrian type locations, applications where there is minimal chance of vehicular traffic.

Heavy Duty – (HD) Meter Box assembly covers that are located near or in driveways, alleys, parking lots, and areas behind mountable curbs.

Meter Box Assembly - A Meter Box Assembly is a 22x16 or 17x30 standard size Meter Box and includes or may include the following:

Meter Box
Meter Box Extension
Cover - (LD or HD)
Lid - as specified

Reference COA Drawings 2366, 2368, & 2369 for 22x16 meter box & cover And 2361, 2362, & 2363 (Jan.2003) - for meter box installations.

TECHNICAL SPECIFICATIONS FOR WATER METER BOXES. COVERS AND LIDS

The following specifications describe the minimum requirements acceptable for Water Meter Boxes, Covers and Lids:

TS1: COVER AND LID FOR METER BOXES FOR 3/4 INCH AND 1 INCH METER

1) The cover shall be supplied with a well fitting reader lid that is easily removable. The top surface of the lid shall be flush with the top of the cover. The cover shall have words " CITY WATER METER" molded into the top surface.

2) The material used for manufacturing the cover and lid shall be new or recycled. The material shall have the following minimum mechanical properties, at variable temperature of -20 to +120 degrees Fahrenheit:

a) Compressive strength- 10,000 psi
b) Tensile Strength- 1,500 psi
c) Flexural strength- 7,500 psi

3) The finished meter box cover and lid shall have the following physical properties:

a) The maximum deflection of the cover and lid shall not exceed ". 1/8 " per foot of width when subjected to 8000 pound test per ASTM C857, A-8, and lid shall not fail when subjected to a load safety factor of 2.17 times 8000 pounds. This load test will be performed when the cover is supported by at least 2-1/2" outside edge of flange.

b) The overall weight of the cover with lid shall not exceed 80 pounds.

c) The materials used for making the cover and lid shall be nondegrading when buried underground and/or exposed to water and/or sunlight for extended periods and when subjected to variable ambient temperature of -20 to +120 degrees Fahrenheit.

d) The cover shall have a 0.5 minimum coefficient of friction. The cover surfaces shall be free of burrs 'and reasonably smooth.

e) The materials used shall be tested at temperature of -20 to +120 degrees Fahrenheit and retain their mechanical properties with no visual cracking, crazing, checking, blistering, surface pitting or deformation. Also the cover and lid shall not crack or deform when being installed in-place in variable ambient temperature of -20 to +120 degrees Fahrenheit.

f) The lid shall not punch through the cover when subjected to a 1000 pound point load over 4 square inches.

4) All materials used for constructing the cover and lid shall be approved for use in domestic water supply systems.

5) The life expectancy of cover and lid shall be at least twenty (20) years.

6) The dimensions for the cover and lid shall be as given in the attached drawing#l.

7) The reader lid shall have an opening to pass standard City key or 1-1/2" X 1/2" lifting slot for lid removal.

TS2: <u>METER BOXES FOR 3/4 INCH AND 1 INCH METERS:</u>

1) The meter box is to be part of an underground enclosure for water meters and will have a cover plate or lid.

2) Meter box will be cast in one piece to form a hollow rectangle and new or recycled materials shall be used in manufacture. The box shall have pipe slots at each end.

3) The material shall have the following minimum mechanical at variable temperature of'-20 to +120 degrees Fahrenheit:

a) Compressive strength- Side Load 200# 4"x4" Area Rated for H20 Load Use

b) Flexural strength- 7,500 psi

4) During testing of the materials at the above ambient temperatures, no visual cracking, crazing, checking, blistering, surface pitting or deformation will be noted.

5) The finished meter box shall have the following physical properties:

a) Maximum wall deflection shall not exceed 1/8" at any point when subjected to earth pressures or forces created during backfilling.
b) Materials used for making the box shall be non-degrading when buried underground and/or exposed to water and/or direct sunlight for extended periods. Life expectancy of the box shall be at least 20 years.
c) Overall weight of the box shall not exceed 80 pounds.

d) Inside dimensions of the box shall be: width = 16-1/2 inches, length = 22-1/2 inches, and depth = 24 inches. See attached drawing #2366 for further dimensions and configuration.
e) Inside surfaces of walls shall be reasonably smooth and free of burrs.
f) All materials used for box construction shall be approved for use in domestic water supply system.
g) Able to be cut with a hand saw.

TS3: METER BOX, EXTENSION AND COVER WITH LID FOR 1-1/2 INCH AND 2 INCH METERS

1) The meter box is to be part of an underground enclosure for water meters and will have a cover plate and lid.

2) The material used for manufacturing the box, cover and lid shall have the following minimum mechanical properties, at variable temperatures of -20 to +120 degrees Fahrenheit:

c) Compressive strength- Side Load 200# 4"x4" Area Rated for H20 Load Use

d) Flexural strength- 7,500 psi

4) During testing of the materials at the above ambient temperatures, no visual cracking, crazing, checking, blistering, surface pitting or deformation will be noted.

5) The finished meter box, cover and lid shall have the following physical properties:

a) Box, cover and lid shall be designed for A8 loading as specified in the latest revision of ASTM C857 " Minimum Structural Design Loading for Underground Precast Concrete Utility Structures ".

b) The weight of the box shall not exceed 75 pounds and weight of cover and lid shall not exceed 75 pounds.

c) Maximum wall deflection shall not exceed 1/8" at any one point when subjected to earth pressures or forces created during backfilling.

d) Materials used for making the box, cover and lid shall be non-degrading when buried underground and/or exposed to water and/or direct sunlight for extended periods. Life expectancy of the box, lid and cover shall be at least 20 years.

e) The dimensions of the box, cover and lid shall conform to attached detailed drawing #A240012, 0013, 0014, 0015 or approved equal.

f) The inside walls of the box shall be free of burrs and reasonably smooth.

g) Cover of the meter box must have a burr free non-skid surface and have "CITY WATER METER" inscribed on the top. The cover shall be secured to the box by stainless steel non-corroding hex bolts. The bolts shall be captive in the cover to prevent loss. The box shall have self centering non-corroding nuts with a deep chamfer to ease installation. The nuts shall be tapped through so material cannot be trapped.

h) The 9" reader lid shall be centered in the cover. The lid stop shall be of non-corroding material. The lid shall have an opening to pass a standard City key or 1-1/2" X 1/2" lifting slot for lid opening.

i) All materials used for constructing box, cover and lid shall be approved for use in domestic water supply systems.

j) The lid shall not punch through the cover when subjected to a 1000 pound point load over 4 square inches.

k) Able to be cut with a hand saw.

TS4: LIGHT WEIGHT AND HEAVY WEIGHT METER BOX COVER AND LIDS FOR 3/4 INCH AND 1 INCH METER

1) The light weight and heavy weight meter box covers and lids shall be of grey cast iron material. The casting shall conform to ASTM A48, class 30 and its latest revision.

2) The casting shall be true to pattern in form and dimension and be free from pouring faults, sponginess, cracks, blowholes or any other defects.

3) The castings shall be filleted boldly at angles and risers and risers shall be sharp and true.

4) All edges shall be rounded or chamfered.

5) The castings shall be thoroughly cleaned and the parting lines, grates and risers grounded flush.

6) The lid top surface shall be flush with the cover. The lid shall seat firmly in the cover without rocking. The lid shall be easily removed from the cover.

7) The cover and lid shall have integrated in the casting top a corrugated design to provide a non-slip surface.

8) The lid shall have integrated on the top of the casting the words "CITY WATER METER".

9) The cover and lid shall be painted with coal tar paint. Paint thickness shall not exceed 1/32 inch.

10) The dimensions of the cover and lid shall conform to attached detailed drawing number 2368 for light weight cover and lid, and drawing number 2369 for heavy weight cover and lid.

DESIGN AND SAMPLES

1) Design Variance

Any design not in strict conformance with specifications and drawings shall be submitted for review to Bob Sidhu, Water Utility Division, Building J, City Yards, located at 5501 Pino Road, NE, Albuquerque, NM, 87109 at least 2 weeks prior to bid opening. Decision of acceptability will be rendered within one week of receipt of submittal and will be final.

2) Samples

At least two days before the bid opening date, the Contractor may submit data and conceptual design of each type of meter box and covers and lids. The Contractor has the option of submitting data and sample of one each type of meter box cover & lids at no cost to the City. Sample meter boxes and covers & lids shall be submitted to Bob Sidhu, Water Utilities Division, Building J Warehouse, located at 5501 Pino Road, NE, Albuquerque, NM, 87109. The City will evaluate the samples and data and conceptual design submitted for meeting the specifications. The Contractors submitting conceptual design and data will have to submit one sample of each type of box, cover & lid, conforming to conceptual design, within 4 weeks of notification of being the low bidder at no cost to the City. The City has the option to conduct material tests for mechanical properties and field tests to check actual deflection and other characteristics of samples submitted. Should the samples submitted be unacceptable to the City, then the City has the option of rejecting the bid. The City's decision of acceptability is final.

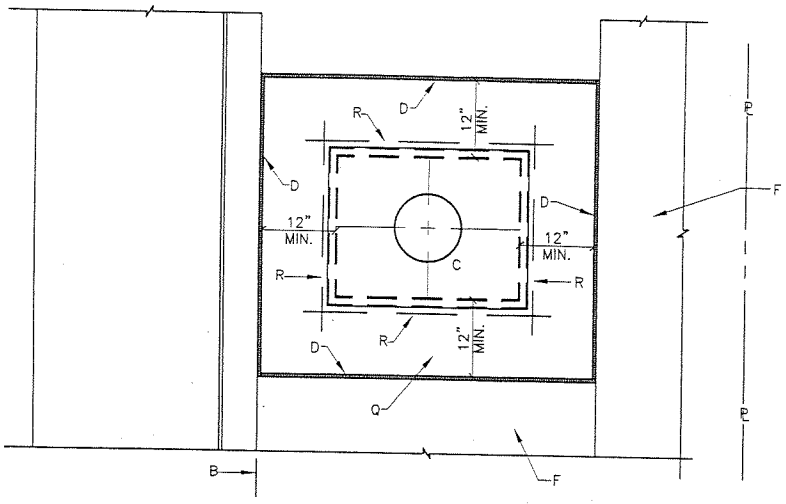

PLAN

SEE DWG. 2361 FOR TYPICAL INSTALLATIONS

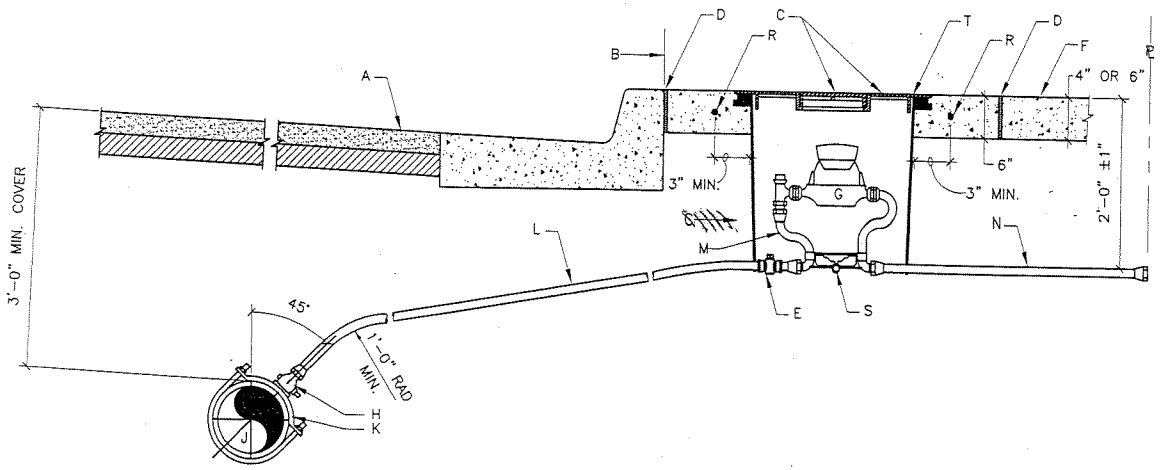

SECTION

SERVICE LINE FOR 3/4" – 1" METER

GENERAL NOTES:

1. THE METER SHALL BE SET UTILIZING A COPPER-SETTER. COPPER-SETTER HEIGHT 10" FOR 1" METER. 7" FOR 3/4" METER.
2. THE VALVE AND METER REGISTER BOX SHALL BE LOCATED UNDER THE LID OPENING. WHERE TWO METERS ARE TO BE INSTALLED IN A SINGLE METER BOX, THE METER REGISTERS SHALL BE WITHIN READING RANGE OF THE LID OPENING.
3. METER BOX LOCATION TO CONFORM TO DWG. 2361.
4. WHEN CONTRACTOR DOES NOT INSTALL METER, CONTRACTOR SHALL PROVIDE REMOVABLE PLUGS FOR END OF COPPER-SETTER.
5. EXISTING CONCRETE TO BE SAWCUT.

CONSTRUCTION NOTES:

A STREET SURFACE.

B BACK OF CURB.

C CAST IRON METER BOX, COVER AND LID. SEE DWG. 2368 OR 2369.

D 1/2" EXPANSION JOINT.

E CURB STOP, LOCATE INSIDE METER BOX.

F SIDEWALK OR DRIVEPAD.

G METER. TOP OF METER TO BE 12"-18" BELOW COVER.

H CORP STOP.

J MAIN WATER LINE.

K TAPPING SADDLE.

L COPPER SERVICE LINE.

M COPPER SETTER.

N TAILPIECE TO PROPERTY LINE WITH INSTA-TITE I.P.T. CAPPED FITTING. DOUBLE CHECK VALVE SHALL BE INSTALLED IN WATER ZONES 0W, 1W, & 1E.

Q CONCRETE PAD REQUIRED IN ALL AREAS PER SEC. 101 EXTERIOR CONCRETE, f'c=3500 psi @ 28 DAYS.

R #4 REBAR CONTINUOUS ALL AROUND METER BOX.

S STABILIZER BAR. USE FOR SINGLE METER ONLY. 12" LONG x 1/2" DIA. GALV. STEEL PIPE.

T METER BOX LID SHALL BE FLUSH WITH SURROUNDING SIDEWALK.

REVISIONS	CITY OF ALBUQUERQUE
	WATER 3/4" – 1" METERED SERVICE LINE INSTALLATION DWG. 2362 JANUARY 2003

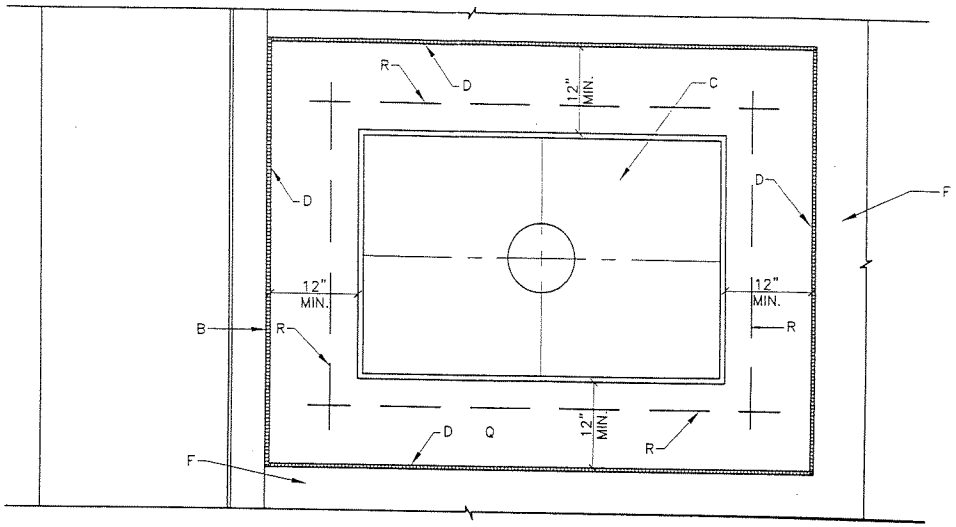

PLAN

SERVICE LINE FOR 1 1/2" – 2" METER

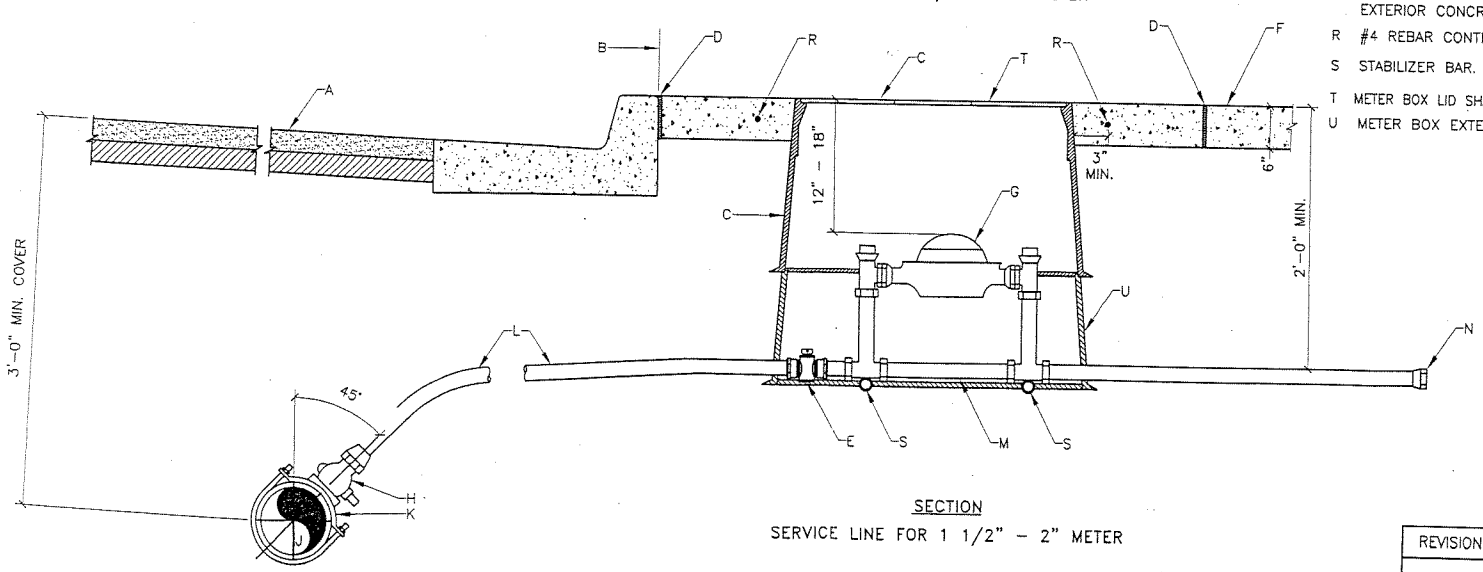

SECTION

SERVICE LINE FOR 1 1/2" – 2" METER

GENERAL NOTES:

1 METER BOX LOCATION TO CONFORM TO DWG. 2361.

CONSTRUCTION NOTES:

A STREET SURFACE.

B BACK OF CURB.

C METER BOX, COVER AND LID. SEE DRAWING 2367. COVER FLUSH WITH SURFACE AND CENTERED OVER METER REGISTER.

D 1/2" EXPANSION JOINT.

E CURB STOP, LOCATE INSIDE METER BOX.

F SIDEWALK OR DRIVEPAD.

G METER. TOP OF METER TO BE 12"–18" BELOW COVER.

H CORP STOP.

J MAIN WATER LINE.

K TAPPING SADDLE.

L COPPER SERVICE LINE.

M COPPER SETTER.

N TAILPIECE 3' LONG, APPROVED COPPER TUBING WITH A CLEAN CUT AT END W/TEMPORARY PLUG. DOUBLE CHECK VALVE SHALL BE INSTALLED IN WATER ZONES 0W, 1W, & 1E.

Q CONCRETE PAD REQUIRED IN ALL AREAS PER SEC. 101 EXTERIOR CONCRETE, f'c=3500 psi @ 28 DAYS.

R #4 REBAR CONTINUOUS ALL AROUND METER BOX.

S STABILIZER BAR. 1/2" X 12" LONG GALVANIZED STEEL PIPE.

T METER BOX LID SHALL BE FLUSH WITH SURROUNDING SIDEWALK.

U METER BOX EXTENSION AS REQUIRED.

REVISIONS	CITY OF ALBUQUERQUE
	WATER 1-1/2" TO 2" METERED SERVICE LINE INSTALLATION DWG. 2363 JANUARY 2003

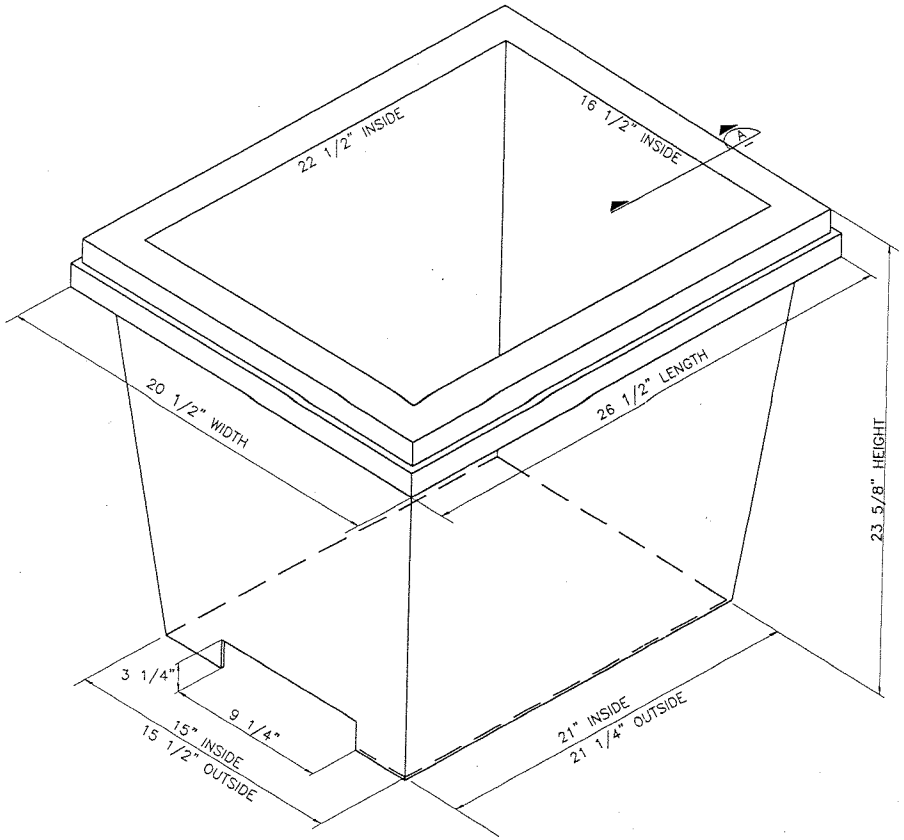

BOX
N.T.S.

GENERAL NOTES:

1 METER BOX LOCATION TO CONFORM TO DWG. 2361.

2 CONSTRUCTION OF METER BOX TO CONFORM TO SECTION 802 FOR WATER METER BOX, 3/4" AND 1" METERS.

3 SEE DWG 2368 AND 2369 FOR CAST IRON METER BOX COVER AND LID.

CONSTRUCTION NOTES:

A PIPE HOLE, 1 AT EACH END, 9 1/4" WIDE BY 3 1/4" HIGH.

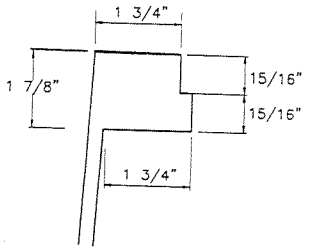

SECTION A
N.T.S.

*METER BOX FOR ONE OR TWO METER INSTALLATIONS

REVISIONS	CITY OF ALBUQUERQUE
	WATER
	METER BOX* FOR 3/4" AND 1" METERS
	DWG. 2366 JANUARY 2003

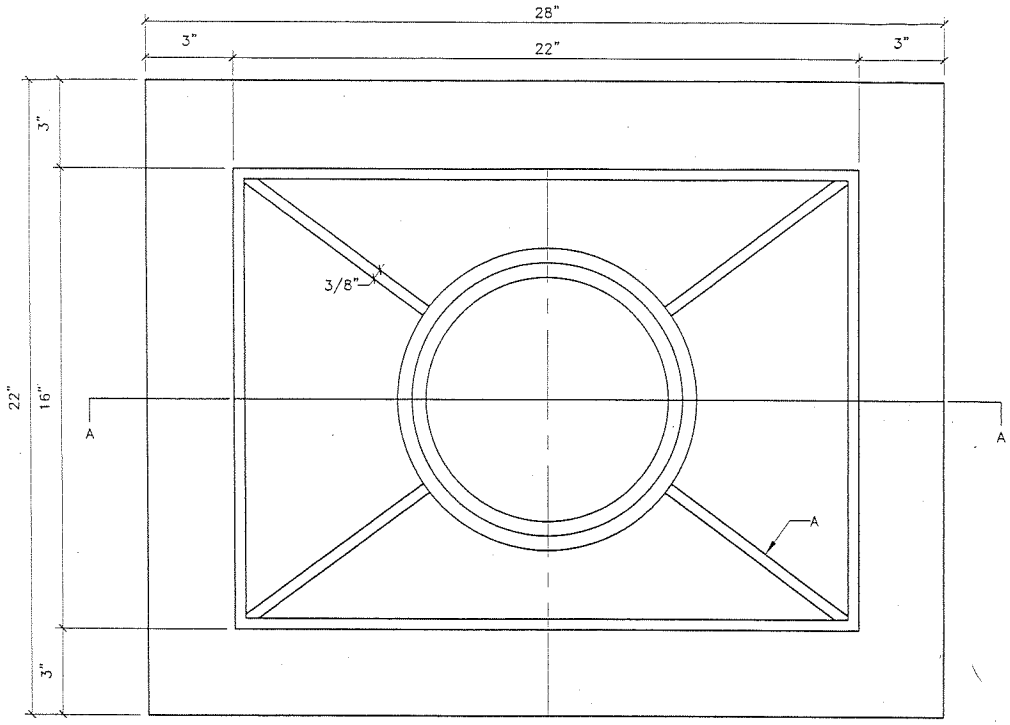

INVERTED PLAN VIEW
BOX COVER FOR 3/4" – 1" METERS

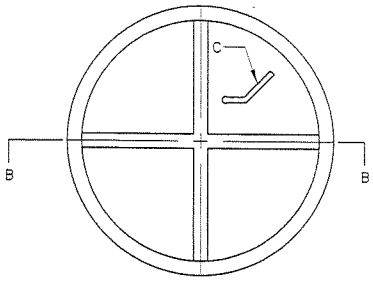

INVERTED PLAN VIEW
BOX LID

GENERAL NOTES:

1 SEE DWG. 2369 WHEN LOCATED ADJACENT TO MOUNTABLE CURB.

COVER

2 MATERIAL – GRAY C.I.

3 ROUND ALL EDGES.

4 TOP TO BE ASPHALT PAINTED.

5 TOP OF COVER SHALL HAVE AN INTEGRATED CORRUGATED DESIGN TO PREVENT SLIPPING.

LID

6 MATERIAL – GRAY C.I.

7 ROUND ALL EDGES.

8 TOP TO BE ASPHALT PAINTED.

9 TOP OF LID SHALL HAVE INTEGRATED CORRUGATED DESIGN TO PREVENT SLIPPING.

10 TOP OF COVER SHALL HAVE INTEGRATED WORDS "CITY WATER METER".

11 LID SHALL NOT ROCK ON COVER AND SHALL BE EASILY OPENED.

12 THE TOP SURFACE OF THE LID SHALL BE FLUSH WITH TOP OF COVER.

CONSTRUCTION NOTES:

A 3/8"x2 3/8" RIB (TYPICAL).

B LID OPENING.

C METER LID KEYHOLE.

D 1/2" THICK RIB.

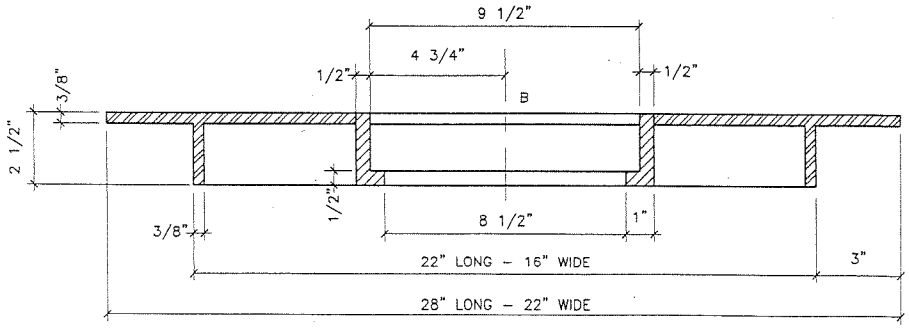

SECTION A–A

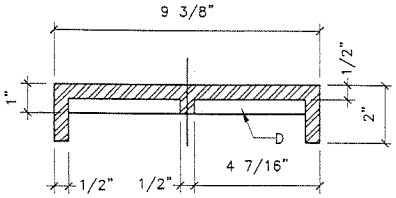

SECTION B–B

REVISIONS	CITY OF ALBUQUERQUE
	WATER
	LIGHTWEIGHT METER BOX COVER & LID FOR 3/4" & 1" METERS
	DWG. 2368 JANUARY 2003

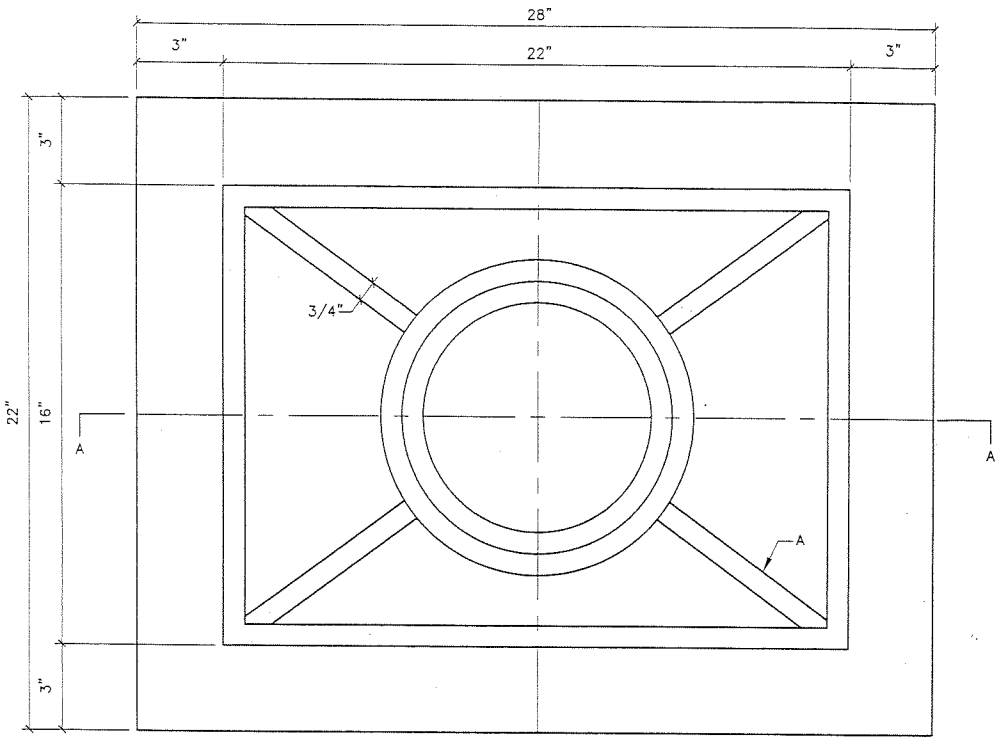

INVERTED PLAN VIEW

BOX COVER FOR 3/4" – 1" METERS

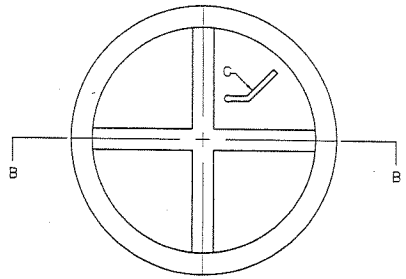

INVERTED PLAN VIEW

BOX LID

GENERAL NOTES:

1 TO BE USED WHERE THE ADJACENT STREET HAS MOUNTABLE CURBS, OR IN DRIVEWAYS.

COVER

2 MATERIAL – GRAY C.I.

3 ROUND ALL EDGES.

4 TOP TO BE ASPHALT PAINTED.

5 TOP OF COVER SHALL HAVE AN INTEGRATED CORRUGATED DESIGN TO PREVENT SLIPPING.

6 COMPONENT THICKNESS 3/4".

LID

7 MATERIAL – GRAY C.I.

8 ROUND ALL EDGES.

9 TOP TO BE ASPHALT PAINTED.

10 TOP OF LID SHALL HAVE INTEGRATED CORRUGATED DESIGN TO PREVENT SLIPPING.

11 TOP OF COVER SHALL HAVE INTEGRATED WORDS "CITY WATER METER".

12 LID SHALL NOT ROCK ON COVER AND SHALL BE EASILY OPENED.

13 THE TOP SURFACE OF THE LID SHALL BE FLUSH WITH TOP OF COVER.

CONSTRUCTION NOTES:

A 3/4"x2" RIB (TYPICAL).

B LID OPENING.

C METER LID KEYHOLE.

D 3/4" THICK RIB.

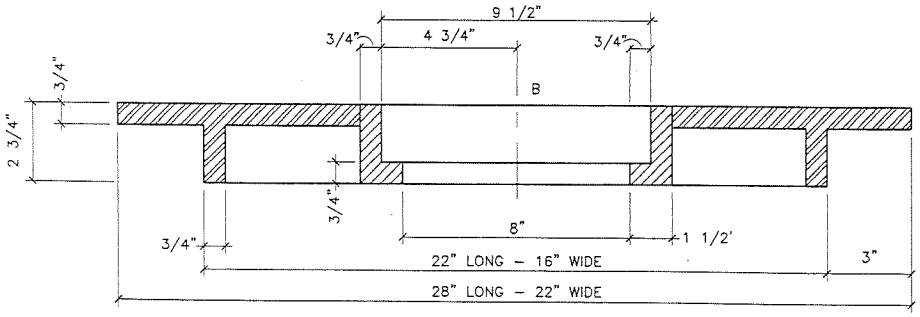

SECTION A–A

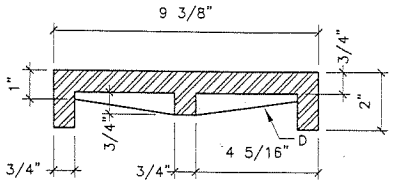

SECTION B–B

REVISIONS	CITY OF ALBUQUERQUE WATER HEAVYWEIGHT METER BOX COVER & LID FOR 3/4" & 1" METERS DWG. 2369 JANUARY 2003

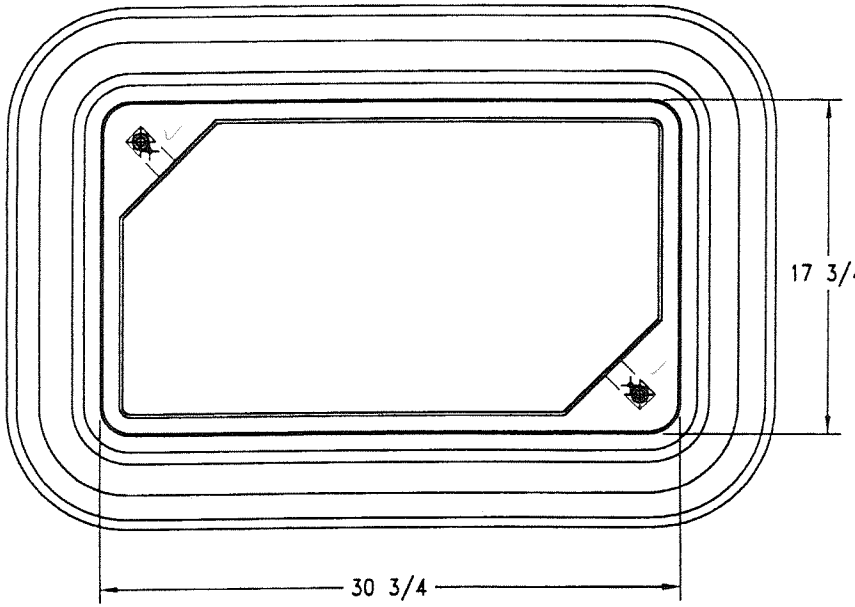

PLAN

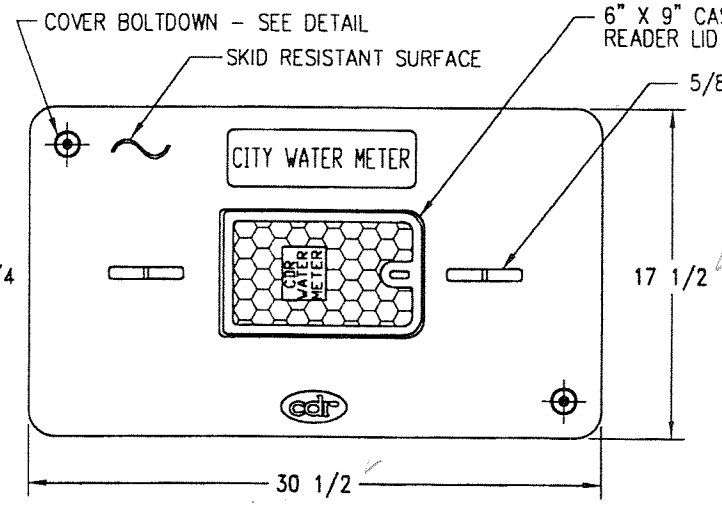

COVER

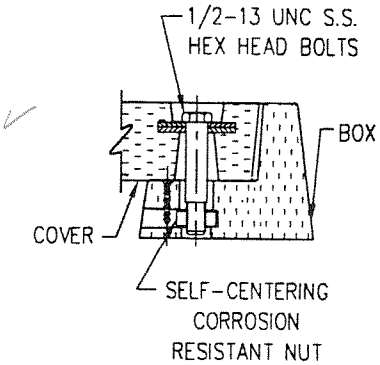

COVER BOLTDOWN DETAIL

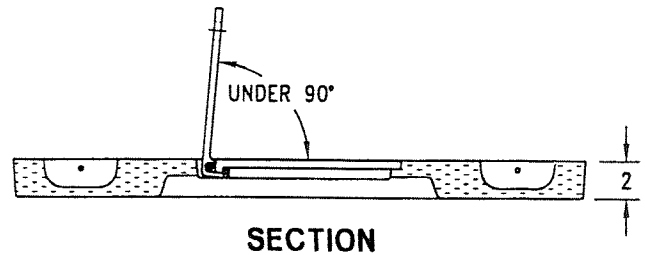

SECTION

COMPONENT	
BOX	WB20-1730-18
COVER	WC20-1730-02C

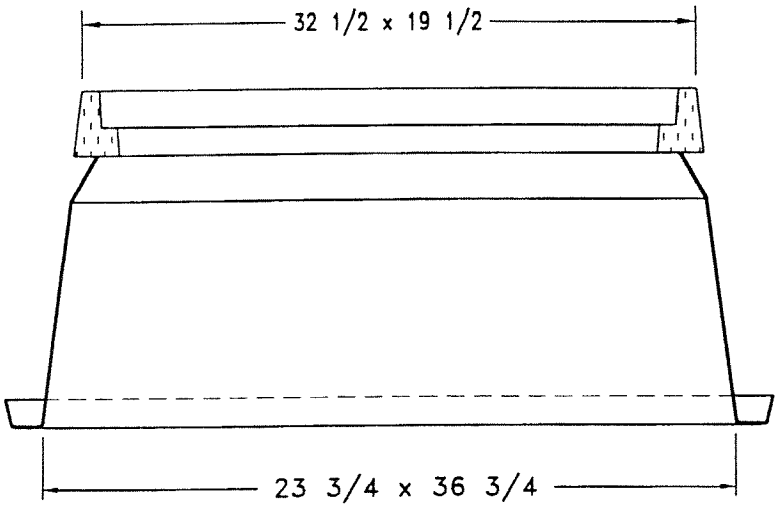

SECTION

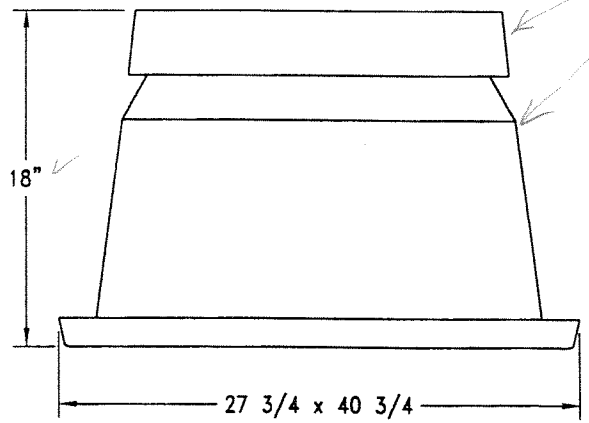

END

- MATERIAL: FIBERGLASS REINFORCED POLYMER CONCRETE & FIBERGLASS REINFORCED POLYMER
- STANDARD COLOR: CONCRETE GRAY
- (OPTIONAL COLORS AVAILABLE FOR COVER AND COLLAR)
- FLARED WALL BOXES ARE NESTABLE
- LOAD RATING: A8 (ASTM C857)

cdr SYSTEMS CORP
146 S. ATLANTIC AVE., ORMOND BEACH, FL. 32176

TITLE **WA20-1730-18C**
FOR THE CITY OF ALBUQUERQUE

DRAWN	B.KENDALL	DATE	03/21/2000
CHECKED		A SIZE	021-0249
APPROVED			

REV 1 B.K. 03/22/2000

A240015

CHK. 12-21-06

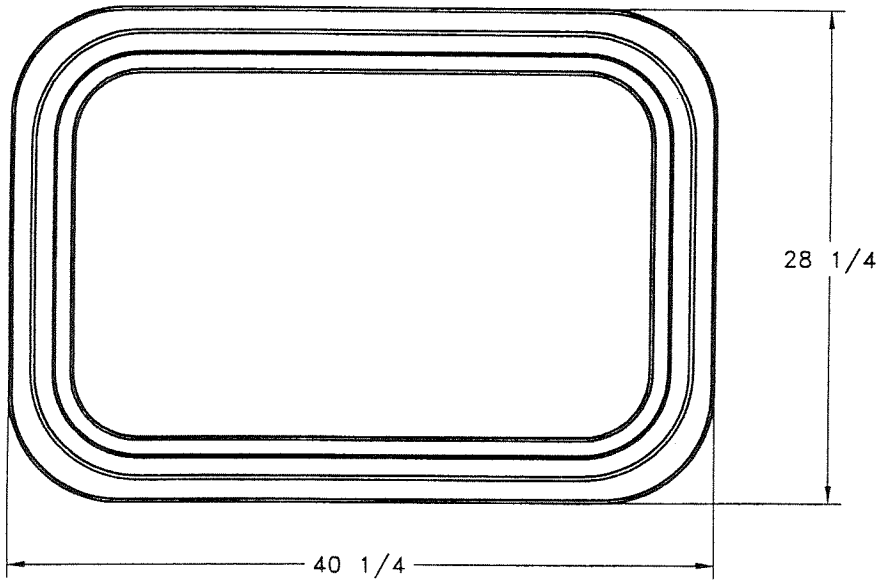

EXTENSION PLAN VIEW

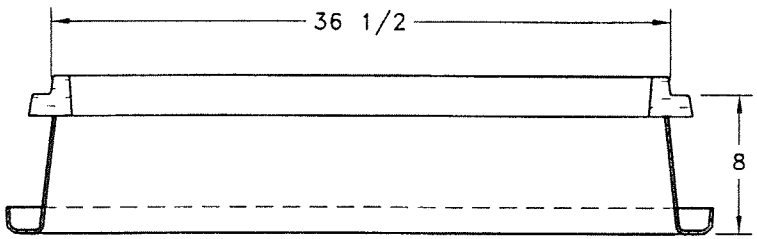

EXTENSION SECTION

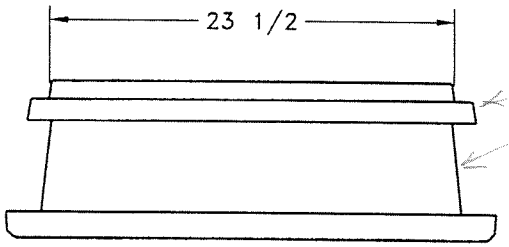

END VIEW

- MATERIAL: FIBERGLASS REINFORCED POLYMER CONCRETE & FIBERGLASS REINFORCED POLYMER
- STANDARD COLOR: CONCRETE GRAY
- (OPTIONAL COLORS AVAILABLE)
- FLARED WALL BOXES ARE NESTABLE
- LOAD RATING: A8 (ASTM C587)

cdr SYSTEMS CORP
146 S. ATLANTIC AVE., ORMOND BEACH, FL. 32176

TITLE	_E00-1730-08 STANDARD VERSION		
DRAWN	B.KENDALL	DATE	04/29/99
CHECKED		A SIZE	021-0201
APPROVED	[illegible]		

CHK - 12-21-06

A240012

Mid-States Plastics, Inc.

Customer Service: KY 800-444-7615 TX 800-521-6554
Fax: KY 859-498-7919 TX 936-760-1357
Web: www.msmeterboxes.com Email: productinfo@msmeterboxes.com

MSBCF-XL Series Meter Boxes

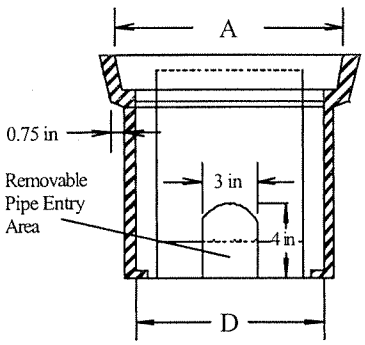

Short Side View

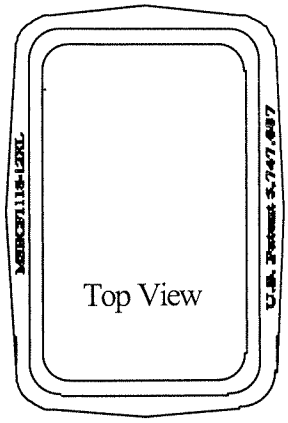

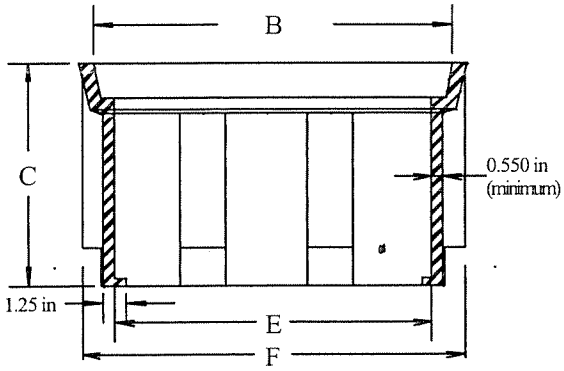

Long Side View

Part Number	A	B	C	D	E	F	Weight
MSBCF1015-12XL	10.5"	15.5"	12"	10"	13.5"	15.75"	13 lbs
MSBCF1118-12XL	11.25"	18.125"	12"	10.125"	17.375"	18.875"	15 lbs
MSBCF1118-18XL	11.25"	18.125"	18"	10.125"	17.375"	18.875"	19.5 lbs
MSBCF1324-12XL	13.75"	23.1875"	12"	12.125"	21.5"	23.125"	18 lbs
MSBCF1324-18XL	13.75"	23.1875"	18"	12.125"	21.5"	23.125"	22.5 lbs
MSBCF1527-18XL	15.75"	26.875"	18"	13.5"	25"	27.25"	24 lbs
MSBCF1730-18XL	17.625"	30.5"	18"	16"	28.75"	30.75"	27 lbs

All dimensions and weights are nominal and subject to change without notice

Typical Specification:

The Meter Box shall be high-density Polyethylene of one-piece molded construction for durability and impact strength and shall have a wall thickness of no less than .550". The Meter Box, with a ductile iron cover installed, shall be able to bear a 20,000lb load in a wheel load (H-20) style test. Meter Box shall be able to withstand a 200lb side load, applied with a 4"x4" plate 1" down for the top center of the box, without deflecting more than 1". The Meter Box shall be black on the exterior to prevent UV degradation, and bright white on the interior to reflect light and ease meter reading and service. The box shall be designed in such a way as to have a integral flange, no more that 3" from the top, to support the box in concrete, paving or soil, and a bottom flange a minimum of 1" wide, to help retard settling. The box shall have removable pre-cut pipe entry areas, 3" wide x 4" high, located on the center of each end (short side) of the box for single meter installations, and 3 pre-cut pipe entry areas (single in, dual out) for dual meter installations. The box shall be designed in such a way as to be securely stackable, and shall be available in 12" and 18" heights as installation conditions may require. The box shall weigh no more than listed weight for each meter size for safety and ease of handling, transport and installation. All dimensions shall be in accordance with the above drawing(s) for the appropriate size meter. The meter box shall be MSBCF-XL as manufactured by Mid-States Plastics Inc. or equal.

© Mid-States Plastics, Inc.♦ 280 Midland Trail, Mt. Sterling, KY 40353 ♦ 101 East Ave M, Conroe, TX 77301 *0203*

A240013

Mid-States Plastics, Inc.

Customer Service: KY 800-444-7615 TX 800-521-6554
Fax: KY 859-498-7919 TX 936-760-1357
Web: www.msmeterboxes.com Email: productinfo@msmeterboxes.com

MSBC Series Meter Boxes

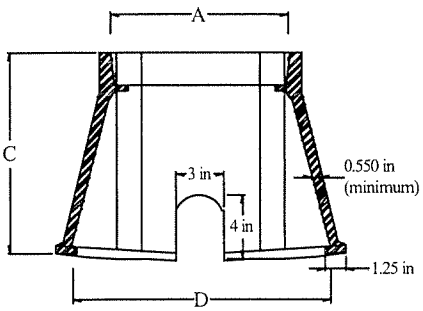

Short Side View

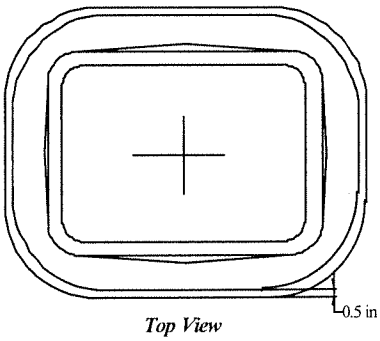

Top View

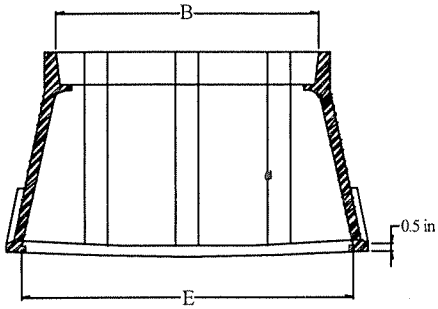

Long Side View

Part Number	A	B	C	D	E	Weight
MSBC1015-12	10.25"	15.5"	12"	15.5"	20.75"	13 lbs
MSBC1015-18	10.25"	15.5"	18"	15.5"	20.75"	20 lbs
MSBC1015-24	10.25"	15.5"	24"	15.5"	20.75"	26 lbs
MSBC1118-12	11.25"	18.125"	12"	16.75"	23.125"	18 lbs
MSBC1118-26	11.25"	18.125"	26"	16.75"	23.125"	30 lbs
MSBC1416-12	14.5"	16.5"	12"	17"	17.5"	14 lbs
MSBC1324-12	13.75"	23.1875"	12"	19"	27.625"	25 lbs
MSBC1730-18	17.625"	30.5"	18"	22.875	35"	40 lbs

All dimensions and weights are nominal and subject to change without notice

Typical Specification:

The meter box shall be high-density Polyethylene of one-piece molded construction for durability and impact strength with dimensions as shown in the referenced drawing. The meter box must have a minimum wall thickness of .550″ and have been tested to withstand a 15,000 lb. vertical load freestanding and a 200lb side load, applied with a 4"x4" plate 1" down for the top center of the box, without deflecting more than 1". All edges shall be clean and smooth for safety during handling and installation. Inner and outer walls are to be smooth with a bright white interior to ease meter reading with a black exterior to retard UV degradation. The meter box shall an anti-settling flange on the bottom for stability and pre-molded pipe entry areas on each end. The box shall weigh no more than listed weight for each meter size for safety and ease of handling, transport and installation. The meter box shall be MSBC style as manufactured by Mid-States Plastics Inc. or equal.

© Mid-States Plastics, Inc. ♦ 280 Midland Trail, Mt. Sterling, KY 40353 ♦ 101 East Ave M, Conroe, TX 77301 *0203*

A24 0014