CITY OF ALBUQUERQUE

REQUEST FOR BID

THE CITY OF ALBUQUERQUE, PURCHASING OFFICE IS REQUESTING OFFERS FOR THE FOLLOWING GOODS OR

REQUEST NUMBER: RFB2006-004-CM
TITLE: WATER METERS - VARIOUS SIZES
OPENING DATE: JULY 20, 2005 (1:30 PM)

FOR ADDITIONAL INFORMATION CONTACT:

CHARLES MCCOY, SENIOR BUYER, 505-857-8670
CITY OF ALBUQUERQUE PURCHASING OFFICE
ALBUQUERQUE/BERNALILLO COUNTY GOVERNMENT CENTER
POST OFFICE BOX 1293
ONE CIVIC PLAZA
ALBUQUERQUE, NEW MEXICO 87103

THE CITY CLERK OF THE CITY OF ALBUQUERQUE WILL RECEIVE SEALED OFFERS FOR THE GOODS OR SERVICES DESCRIBED IN THIS REQUEST AT:

OFFICE OF THE CITY CLERK
CITY OF ALBUQUERQUE
POST OFFICE BOX 1293
ONE CIVIC PLAZA
ALBUQUERQUE, NEW MEXICO 87103

HAND CARRIED OFFERS WILL BE RECEIVED AT THE OFFICE OF THE CITY CLERK, ALBUQUERQUE/BERNALILLO COUNTY GOVERNMENT BUILDING, 11TH FLOOR, 1 CIVIC PLAZA, ALBUQUERQUE, NM.

OFFERS WILL BE RECEIVED UNTIL 1:30 PM JULY 20, 2005

NOTE: USE OF THE MAIL SERVICE IS AT YOUR OWN RISK FOR PROPER DELIVERY.

OFFERS WILL BE OPENED PROMPTLY AT 1:30 PM AT:
ALBUQUERQUE/BERNALILLO COUNTY GOVERNMENT CENTER
7TH FLOOR CONFERENCE ROOM
ONE CIVIC PLAZA
ALBUQUERQUE, NEW MEXICO

GENERAL INFORMATION AND REQUIREMENTS
REQUEST NUMBER: RFB2006-004-CM

ALL OFFERORS ARE RESPONSIBLE FOR READING AND UNDERSTANDING ALL INFORMATION CONTAINED IN THIS REQUEST. OFFERORS ARE RESPONSIBLE FOR CHECKING TO ASSURE THAT NO PAGES ARE MISSING. PLEASE CHECK THIS PACKAGE UPON RECEIPT. IF ANY PAGES ARE MISSING PLEASE CONTACT THE BUYER NAMED ON THE COVER PAGE.

THE FOLLOWING INFORMATION AND FORMS ARE REQUIREMENTS FOR THIS REQUEST.

_____ OFFEROR COMPLIANCE FORM
COMPLETE ALL APPLICABLE INFORMATION, INCLUDING YOUR FEDERAL TAX IDENTIFICATION NUMBER, AND RETURN IT WITH YOUR OFFER.

_____ PRICING DETAIL FORM(S)
COMPLETE ALL PRICING DETAIL, INCLUDING UNIT AND EXTENDED PRICES (THIS IS VERY IMPORTANT).

_____ OFFEROR COMMENTS FORM
IF APPLICABLE, COMPLETE, SIGN AND RETURN WITH YOUR OFFER.

_____ LOCAL PREFERENCE CERTIFICATION FORM
IF APPLICABLE, COMPLETE, SIGN AND RETURN WITH YOUR OFFER. THIS FORM MUST ACCOMPANY YOUR OFFER TO BE CONSIDERED FOR THE PREFERENCE.

OFFEROR COMPLIANCE FORM

REQUEST NUMBER: RFB2006-004-CM
OPENING DATE: JULY 20,2005

FOR FURTHER INFORMATION
CALL CHARLES MCCOY
AT 505-)857-8670

DELIVERY DATE: _____
(PLEASE SPECIFY)

FOB POINT:
CATHY CHAVEZ 505-857-8671
CITY WAREHOUSE
5501 PINO NE, BLDG G
ALBUQUERQUE, NM 87109

REQUISITION NUMBER(S):

BID BOND AMOUNT: $0.00 PERFORM BOND AMOUNT: $0.00

BID BOND PERCENT: 0% PERFORM BOND 0%

IF APPLICABLE, BID AND PERFORMANCE BOND INFORMATION CAN BE FOUND IN THE SUPPLEMENTAL TERMS AND CONDITIONS.

DISCOUNT: PLEASE INDICATE YOUR FIRM'S DISCOUNT FOR PROMPT PAYMENT:
(THE MINIMUM ACCEPTABLE PERIOD IS 20 CALENDAR DAYS)

20 CALENDAR DAYS:_____%

30 CALENDAR DAYS:_____%

OTHER:____ CALENDAR DAYS:_____%

A 5% LOCAL PREFERENCE IS AVAILABLE FOR THIS BID. THE LOCAL PREFERENCE CERTIFICATION FORM MUST BE COMPLETED, CERTIFIED AND SUBMITTED WITH THE BID IN ORDER TO BE CONSIDERED.
LOCAL PREFERENCE REQUESTED: MFG?_____ BUSINESS?_____

A STATE RESIDENT PREFERENCE MAY BE AVAILABLE FOR THIS BID. A CURRENT STATE OF NEW MEXICO PURCHASING OFFICE ISSUED RESIDENT PREFERENCE NUMBER MUST BE SUBMITTED WITH THE BID IN ORDER TO QUALIFY FOR CONSIDERATION.

PLEASE ENTER THE STATE RESIDENT PREFERENCE NUMBER HERE:_____ MFG?_____
BUSINESS?_____

COMPLIANCE AGREEMENT

I, THE UNDERSIGNED, HAVE READ AND EXAMINED THE GENERAL TERMS , CONDITIONS, ANY SUPPLEMENTAL TERMS AND CONDITIONS, AND THE SPECIFICATIONS OF THIS REQUEST AND AGREE TO COMPLY WITH ALL OF THEM.

SIGNATURE: _____ DATE:_____/_____/_____

NAME: _____ TITLE:_____
(PRINT OR TYPE)

COMPANY NAME:_____ EIN:_____

ADDRESS:_____

CITY:_____STATE:_____ ZIP:_____

PHONE: (_____)_____-_____ FAX: (_____)_____-_____

DIRECT DEPOSIT PAYMENT TRANSFERS ARE STRONGLY ENCOURAGED.
TO ACCESS FORMS VISIT WWW.CABQ.GOV/ONLINESVCS/VENDORS/VENDORACH.HTML.

PRICING DETAIL FORM

REQUEST NUMBER: RFB2006-004-CM

GROUP NO.	ITEM NO.	QUANTITY/UNIT	ITEM	UNIT PRICE	TOTAL PRICE
			IN ACCORDANCE WITH THE ENCLOSED SPECIFICATIONS, TERMS AND CONDITIONS, FURNISH THE CITY WITH THE FOLLOWING ITEMS ON A TWO-YEAR BLANKET CONTRACT WITH TWO ONE-YEAR CONTRACT EXTENSIONS ALLOWABLE WITH MUTUAL AGREEMENT:		
1	1	1.00 EA ESTIMATED	A200035 WATER METER, 5/8" X 3/4" MFG. _____ MFG. P/N _____	_____	_____
1	2	1.00 EA ESTIMATED	A200101 WATER METER, 1" MFG. _____ MFG. P/N _____	_____	_____
1	3	1.00 EA ESTIMATED	A200150 WATER METER, 1-1/2" MFG. _____ MFG. P/N _____	_____	_____
1	4	1.00 EA ESTIMATED	A200200 WATER METER, 2" MFG. _____ MFG. P/N _____	_____	_____
1	5	1.00 EA	A200350 COMPOUND WATER METER, 3" MFG. _____ MFG. P/N _____	_____	_____
1	6	1.00 EA ESTIMATED	A200450 COMPOUND WATER METER, 4" MFG. _____ MFG. P/N _____	_____	_____
1	7	1.00 EA ESTIMATED	A200650 COMPOUND WATER METER, 6" MFG. _____ MFG. P/N _____	_____	_____
1	8	1.00 EA ESTIMATED	A201125 FIRE HYDRANT WATER METER, 3" MFG. _____ MFG. P/N _____	_____	_____

PRICING DETAIL FORM

REQUEST NUMBER: RFB2006-004-CM

GROUP NO.	ITEM NO.	QUANTITY/UNIT	ITEM	UNIT PRICE	TOTAL PRICE
1	9	1.00 EA ESTIMATED	A200250 TURBINE WATER METERS, 2" MFG. _____ MFG. P/N _____	_____	_____
1	10	1.00 EA ESTIMATED	A200300 TURBINE WATER METERS, 3" MFG. _____ MFG. P/N _____	_____	_____
1	11	1.00 EA ESTIMATED	A200400 TURBINE WATER METERS, 4" MFG. _____ MFG. P/N _____	_____	_____
1	12	1.00 EA ESTIMATED	A200600 TURBINE WATER METERS, 6" MFG. _____ MFG. P/N _____	_____	_____
1	13	1.00 EA ESTIMATED	A200855 TURBINE WATER METERS, 8" MFG. _____ MFG. P/N _____	_____	_____
1	14	1.00 EA ESTIMATED	A201100 TURBINE WATER VALVES, 10" MFG. _____ MFG. P/N _____	_____	_____
1	15	1.00 EA ESTIMATED	A201150 FIRELINE WATER METERS, 10" MFG. _____ MFG. P/N _____	_____	_____

PRICING DETAIL FORM

REQUEST NUMBER: RFB2006-004-CM

GROUP NO.	ITEM NO.	QUANTITY/UNIT	ITEM	UNIT PRICE	TOTAL PRICE
1	16	1.00 EA ESTIMATED	ADDITIONAL COST TO PROVIDE 2" AND SMALLER METERS WITH THE MANUFACTURERS AUTOMATIC METER READING SYSTEM REGISTER THAT IS COMPATIBLE WITH THE CITY'S EXISTING ITRON METER READING SYSTEM. THE REGISTER SHALL BE AN ENCODED REGISTER PROVIDED WITH SIX FEET OF WIRE POTTED AND WATERPROOFED AT BOTH ENDS. THE UNIT COST TO BE BID SHOULD BE THE COST OF A COMPLETE METER ENABLED FOR ITRON METER READING MINUS COST OF A COMPLETE METER ENABLED FOR MANUAL READING ONLY.	_____	_____
1	17	1.00 EA ESTIMATED	ADDITIONAL COST TO PROVIDE COMPOUND, FIRE LINE AND TURBINE METERS WITH THE MANUFACTURERS AUTOMATIC METER READING SYSTEM REGISTER THAT IS COMPATIBLE WITH THE CITY'S EXISTING ITRON METER READING SYSTEM. THE REGISTER SHALL BE AN ENCODED REGISTER PROVIDED WITH SIX FEET OF WIRE POTTED AND WATERPROOFED AT BOTH ENDS. THE UNIT COST TO BE BID SHOULD BE THE COST OF A COMPLETE METER ENABLED FOR ITRON METER READING MINUS COST OF A COMPLETE METER ENABLED FOR MANUAL READING ONLY.	_____	_____

GROUP TOTAL ==========

ALL ITEMS TO CONFORM TO SPECIFICATIONS ON FOLLOWING PAGES.

ALL OFFERED PRICING MUST INCLUDE ALL DELIVERY CHARGES AND APPLICABLE TAXES. TAX EXEMPTION CERTICATE AVAILABLE UPON REQUEST.

QUANTITIES ARE ESTIMATED. ACTUAL ORDERS AGAINST A CONTRACT RESULTING FROM THIS TRANSACTION MAY BE MORE OR LESS THAN THE ESTIMATED QUANTITIES.

QUESTIONS ABOUT THIS PROCUREMENT SHOULD BE ADDRESSED TO CHARLES MCCOY AT CMCCOY@CABQ.GOV OR 505-857-8672.

**********LAST ITEM REQUESTED**********

SPECIAL TERMS AND CONDITIONS FOR WATER METERS

These Special Terms and Conditions are in addition to the General and Supplemental Terms and Conditions of the bid.

1) QUANTITIES

The Quantities listed in the bid proposal are estimated for the purpose of comparing the bids only. The City does not state or imply any guarantee that the quantities listed in the bid proposal will be ordered. The quantities listed could increase or decrease depending on the needs of the City. The quantities, however, are derived from actual usage over the previous year on the smaller meters and probably usage on the larger meters (3"and up). The quantities have not been derived arbitrarily.

2) GUARANTEE

The bidder guarantees product and parts to be free from material and workmanship defects for a period of one (1) year from date of shipment.

5/8" x ¾" and 1" water meters will be guaranteed to perform to the American Water Works Association (AWWA) new meter accuracy standards for a period of one (1) year from date of shipment. Also the bidder shall guarantee that 5/8" x ¾" and 1" meters will perform to at least AWWA repair meter accuracy standards for an additional fourteen (14) years from date of shipment.

1-1/2" and 2" water meters will be guaranteed to perform to AWWA new meter accuracy standards for a period of one (1) year from date of shipment. Also, the bidder shall guarantee that 1-1/2" and 2" meters will perform to at least AWWA repair meter accuracy standards for an additional nine (9) years from date of shipment.

The bronze main case shall be guaranteed to be free from defects in material and workmanship for a period of twenty-five (25) years from date of shipment.

Compound meters, fire hydrant meters, fire line meters and magnetic turbine meters shall be guaranteed to be free from defects in material and workmanship for a period of one (1) year from date of shipment. Also, the bidder shall guarantee that these meters meet AWWA new meter accuracy for a period of one (1) year from date of shipment.

Registers will be guaranteed to be free from defects in material and workmanship from the date of shipment as follows:

(a) Twenty-five (25) years for 5/8" x ¾" through 2" water meters.
(b) One (1) year for compound meters, fire hydrant meters, fire line meters and 2" through 10" magnetic turbine meters.

3) PARTS AVAILABILITY AND MAINTENANCE

The meters quoted shall have repair parts available for at least five (5) years from the last date of issue of a Purchase Order (PO) or Purchase Order Release (POR). The bidders shall submit with the bid, a price schedule of parts. Prior to the completion of award, the successful bidder shall furnish three (3) copies of repair and maintenance procedures with the bids; one of which shall be in Microsoft Word electronic format.

4) SUBMITTAL OF SAMPLE METERS

The bidders shall submit one (1) sample meter for each size, 5/8 x ¾" through 2" positive displacement, magnetic drive water meters and fire hydrant meters, proposed to be furnished. The meters and data shall be delivered to the Water Utility Division, Bldg. J Warehouse, located at 5501 Pino Rd. NE, Albuquerque, NM, 87110. Samples will be accepted up until noon local time two (2) weekdays prior to bid opening. Failure to do so may be cause for rejection of the bid. The City will pay only for the meters for the successful bidder. Unsuccessful bidders must retrieve their submittals within 30 days of award of contract. The City will not be responsible for meters left beyond the 30-day period.

5) METER SERIAL NUMBERS

The serial number (SN) of each meter shall be clearly stamped on the cover and main case. The SN should be at least five digits. The size and flow direction shall be cast on the outside of the main case.

6) BACKUP METER SUPPLY

The meter manufacturer shall have a local supplier in the Albuquerque Metropolitan Area. The local supplier will be required to keep in stock a back up of small water meters as follows:

5/8" x ¾" Water Meters	-	360 each
1" Water Meters	-	80 each
1-1/2" Water Meters	-	10 each
2" Water Meters	-	10 each

These quantities should be kept as an emergency back up that can be delivered within 24 hours of issuance of the PO or POR should the situation arise. If a PO or POR is placed and all or any part of these quantities are depleted, the stock will be replenished as soon as possible in order to continue to meet the requirements of this condition through the duration of the contract and/or any extension(s) of the contract. The local supplier must have these quantities in stock within four (4) weeks after a contract has been issued. The City will issue a POR for the ultimate purchase of these meters by the end of the contract term.

The meters shall be new.

7) LITERATURE

The bidders shall submit three (3) copies of descriptive literature with the bid showing meters, outline drawings, dimensional data, parts and accessories list, typical accuracy and pressure loss performance curves. Typical accuracy and pressure performance curves shall be submitted in 8.5” x 11” format.

POSITIVE DISPLACEMENT MAGNETIC DRIVE WATER METER SPECIFICATIONS

(5/8" x ¾" Through 2" Sizes)

The specifications contained herein cover cold water, positive displacement, magnetic drive meters, 5/8" x ¾", 1", 1-1/2" and 2" in size.

A) GENERAL

1) Water meters furnished under this specification shall comply with the latest revision of AWWA Standards C700 with additions as herein specified.

2) Water meters shall be displacement type magnetic drive and oscillating piston type. The piston shall be coupled with a stainless steel magnet.

3) Meter registers shall be magnetically driven, hermetically sealed, completely fog, moisture, and dust proof and scratch resistant. Registers shall be straight reading with black numerals on a white background. The meter shall register total flow in units of cubic feet. Registers shall be equipped with sweep test indicators divided into 100 equal parts with each tenth graduation labeled. All registers shall be equipped with low flow indicators.

4) Meters shall have the capability of being upgraded via changing the registers to automatic meter reading system registers. The upgraded registers shall be capable of being added to the existing main cases.

5) Where called for in the bid proposal, meters shall be furnished with the manufacturer's automatic meter reading system register that is compatible with the City's existing ITRON meter reading system. Each register shall be an encoded register provided with six (6) feet of wire, potted and waterproofed at both ends.

6) <u>Tamper Resistant Features:</u> Preventing the removal of registers by customers shall be accomplished by providing an internal locking system inside each meter's main case. Each meter shall be equipped with a special tool that will be available to only Water Utility Division (WUD) personnel for removal of the register. The meter must be disassembled in order to remove the sealed register, from the inside of the main case.

7) <u>Parts Interchangeability:</u> All meters shall be manufactured with sufficient quality control to permit successful interchangeability of the register and measuring chambers without affecting new meter accuracy.

8) Meters shall be equipped with strainers, which are adequately sized to accommodate the rated flows of the meters.

9) The serial number (SN) of each meter shall be clearly stamped on the cover and main case. The SN should be at least five digits. The size and flow direction shall be cast on the outside of the main case.

B) MATERIALS AND PARTS

1) Main Case: The main case shall be bronze with a plastic bottom plate on 5/8" x ¾" water meters and a cast iron bottom plate on size 1" meters. The main case on the 1-1/2" and 2" meters shall be bronze with flanged ends.

2) Measuring Chamber: The measuring chamber shall be composed of a corrosion resistant thermoplastic material.

3) Register Glass: The register glass shall be made of a high strength, break resistant, and scratch resistant glass.

C) ACCURACY

Meters shall meet new meter accuracy standards, in accordance with the latest revision of AWWA Standard C700.

COMPOUND METER SPECIFICATIONS
(3" Through 6" Sizes)

The specifications contained herein cover cold water compound meters 3", 4" and 6" in size.

A) GENERAL

1) Water meters furnished under this specification shall comply with the latest revision of AWWA Standard C702 with additions as herein specified.

2) Each compound meter is essentially two meters within a single bronze housing. Low flows are measured through the piston type positive displacement-measuring chamber. High flows are measured through the turbine chamber. Flows through the high and low measuring chambers are controlled by bronze swing action valves. The flows measured in the two chambers shall be recorded on a single billing register.

3) The low flow chamber of a compound meter shall be positive displacement oscillating piston type.

4) The meter shall have the capability of being upgraded via changing the register to an automatic meter reading system register. The upgraded register shall be capable of being added to the existing main case.

5) Where called for in the bid proposal, each meter shall be furnished with the manufacturer's automatic meter reading system register that is compatible with the City's existing ITRON meter reading system. Each register shall be an encoded register provided with six (6) feet of wire, potted and waterproofed at both ends.

6) The register shall be magnetically driven, hermetically sealed, scratch resistant, and completely fog, moisture, and dust proof. The register shall be straight reading with black numerals on a white background. The meter shall register total flow in units of cubic feet. The register shall be equipped with a sweep test indicator divided into 100 equal parts with each tenth graduation labeled. The register shall be equipped with a low flow indicator.

7) <u>Parts Interchangeability:</u> All parts shall be manufactured with sufficient quality control to permit successful interchangeability of the register and measuring chambers without affecting meter accuracy.

8) The serial number (SN) of the meter shall be clearly stamped on the cover and main case. The SN shall be at least five digits. The size and flow direction shall be cast on the outside of the main case.

B) MATERIAL AND PARTS

1) Test Plug: The meter shall come with a test plug for inline testing.

2) Main Case: The main case shall be made of bronze material.

3) Register Retaining Cup Assembly and Cover: The cup assembly and cover shall be made of bronze.

4) Register Glass: The register shall be made of high strength, break and scratch resistant glass.

C) ACCURACY

Meters shall meet new meter accuracy standards, in accordance with the latest revision of AWWA Standard C702.

FIRE HYDRANT METER SPECIFICATIONS

A) GENERAL

The fire hydrant meter shall be a turbine type meter specifically made for direct connection to a 2-1/2" hose connection on a fire hydrant. The inlet end of the meter shall be compatible for a union type coupling. The discharge end of the meter shall be equipped with a gate valve and a fire hose fitting assembly with American National Standards Institute (ANSI) threads.

B) MATERIAL AND PARTS

1) All threads shall be in conformity with ASA Specification B-26 or latest revision for "National (American) Standard Fire Hose Coupling Screw Thread".

2) Registration shall be in cubic feet. The register shall be magnetically driven, hermetically sealed, scratch resistant, and completely fog, moisture and dust proof. The register shall be straight reading with black numerals on white background. The register shall be equipped with a sweep test indicator divided into 100 equal parts with each tenth graduation labeled. The register shall be equipped with a low flow indicator. The register must not be removable from the meter except through an internal and inaccessible locking device.

3) The locking device shall be completely reusable and not require the use of any new parts should the register be removed by Water Utility Division personnel. The locking device shall be made of stainless steel. The register shall be covered by a hinged metal lid that is capable of being locked closed with the use of a padlock. The meter shall be supplied with a U.S. made 2" gate valve on the outlet side.

4) The meter shall contain a flow restrictive device that will not allow flows to exceed 350 gallons per minute with an available head of 80 pounds per square inch.

FIRE LINE METER SPECIFICATIONS
(Combination Dual Fire Service Type with Direct Read Registers 4" Through 10" Sizes - For Service Water Meter Assemblies)

A) GENERAL

These specifications set forth the minimum acceptable requirements for cold water, combination dual fire service meters consisting of two (2) Class II turbine type meters, a ductile iron strainer assembly and a weighted detector check valve. This meter assembly is used in extremely wide flow range applications and where measurement of both domestic and fire service water usage is desired. The meter assembly package shall comply with the latest revision of ANSI/AWWA Standard C703.

B) MAINCASES

Meter main cases on the mainline and the bypass shall be AWWA bronze. The flange size, model and direction of flow shall be cast in raised characters on both sides of the main case. Straightening vanes shall be provided in both meter main cases.

C) BYPASS METER

The bypass meter shall meet all requirements of the City of Albuquerque Standard Specifications and Details for 2" and smaller meters.

D) MAGNETIC COUPLING

All reduction gearing shall be enclosed in the permanently, hermetically sealed register. The drive magnet shall be located in the measuring element, and the following magnet shall be located inside the permanently, hermetically sealed register. An intermediate magnetically active material shall be required to distribute the magnetic flux uniformly to the following magnet, thereby improving service life, low flow sensitivity, extended flow capacity and overall accuracy of the entire combination meter assembly.

E) DIRECT READ REGISTER

The direct read register shall be a standard totalizing register and shall have a stainless steel cup and tempered glass lens. The register shall be permanently, hermetically sealed and scratch resistant. All registers of similar size and registration shall have a standard gear ratio reduction so as to permit complete register interchangeability. The register shall be assembled to the measuring chamber in a tamperproof manner. Removal can be made only after the measuring chamber is removed from the main case. The meter must be disassembled to remove the sealed register from inside the main case. Sweep hand reading and odometer wheel detail

shall conform to the latest version of AWWA Standard C701. The register shall be straight reading with black numerals on a white background. The meter shall register total flow in units of cubic feet. A low flow indicator shall be included in the register assembly and be visible on top of the register's dial face.

F) MAXIMUM OPERATING PRESSURE

The meters shall operate properly without leakage, damage or malfunction up to a maximum pressure of 175 pounds per square inch gage.

G) STRAIGHTENING VANES

All meters, 4" to 10" sizes, must have internal straightening vanes installed and retained firmly in the inlet portion of the main case to maximize meter performance and accuracy.

MAGNETIC TURBINE METER SPECIFICATIONS
(2” Through 10” Sizes)

The specifications contained herein cover cold water turbine meters 2”, 3”, 4”, 6”, 8” and 10” sizes.

A) GENERAL

1) Water meters furnished under this specification shall comply with the latest revision of AWWA Standard C701 with additions as herein specified.

2) Meters shall be magnetic drive type meters.

3) Each meter shall consist of two basic assemblies; the main case and the measuring chamber. Straightening vanes in the main case shall be provided to minimize the swirl upstream of the meter so as to direct the flow evenly to the rotor. The measuring chamber assembly shall include the rotor, adjusting vane (for calibration) and sealed direct register. The meter shall include a built-in strainer and test plug.

4) The register shall be magnetically driven, hermetically sealed, scratch resistant, and completely fog, moisture and dust proof. The register shall be straight reading with black numerals on a white background. The meter shall register total flow in units of cubic feet. The register shall be equipped with a sweep test indicator divided into 100 equal parts with each tenth graduation labeled. The register shall be equipped a low flow indicator. The register must not be removable from the meter except through an internal and inaccessible locking device. The meter must be disassembled to remove the sealed register from inside the main case.

5) The meter shall have the capability of being upgraded via changing the register to an automatic meter reading system register. The upgraded register shall be capable of being added to the existing main case.

6) Where called for in the bid proposal, each meter shall be furnished with the manufacturer’s automatic meter reading system register that is compatible with the City’s existing ITRON meter reading system. Each register be an encoded register shall be provided with six (6) feet of wire, potted and waterproofed at both ends.

B) MATERIALS AND PARTS

1) Main Case: The main case shall be made of bronze material and external case bolts and nuts shall be made of stainless steel. All internal parts and straightening vanes shall be made of bronze and stainless steel.

2) Strainer: The strainer shall be made of bronze for 2" to 4" meters, and cast iron or bronze for 6" and larger meters. The strainer shall be rigid, easily removed and shall have effective straining areas at least double those of the meter main case inlets. The strainer and all attaching hardware (i.e., gasket bolts and nuts) are to be supplied with the meter.

3) Register Box Ring and Lid: The ring and lid shall be made of bronze.

C) ACCURACY

The meters shall meet new meter accuracy in accordance with the latest revision of AWWA Standard C701.

D) LITERATURE

The bidder shall submit three (3) copies of descriptive literature with the bid showing meter outline drawings, dimensional data, typical accuracy and pressure loss performance curves, and parts and accessories list.

Specifications Approved by Water Utility Division:

_____ _____

Water Utility Division Manager **Date**

SR® WATER METERS

Invensys
Metering Systems

DISPLACEMENT TYPE MAGNETIC DRIVE COLD WATER METERS
5/8" (DN 15mm), 3/4" (DN 20mm) and 1" (DN 25mm) Sizes

DESCRIPTION

APPLICATIONS: Measurement of cold water where flow is only in one direction; in residential, commercial and industrial services.

CONFORMANCE TO STANDARDS: Invensys Sealed Register® Water Meters comply with ANSI/AWWA Standard C700, latest revision. Each meter is tested to insure compliance.

CONSTRUCTION: Invensys SR Water Meters consist of three basic components: maincase; measuring chamber; and permanently, hermetically-sealed register. Maincases are of bronze with externally-threaded spuds. Measuring chambers are of Rocksyn®, a corrosion-resistant thermoplastic material. Bronze measuring chambers are available as an option.

Maincase bottom plates are available in bronze or, if frost protection is desired, in cast iron or synthetic polymer. Simplicity of design and precise machining of components allows interchangeability of parts among like-size meters to provide ease of maintenance. The register, measuring chamber and strainer can be removed without removing the maincase from the installation.

SEALED REGISTER: Permanently, hermetically sealed; proven magnetic drive design; with integral tamper-proof locking device. Guaranteed for 25 years. The standard register includes a straight-reading, odometer-type totalization display; a 360° test circle with center sweep hand; and a low flow (leak) detector. Gears are self-lubricating, molded plastic for long life and minimum friction. The hermetic sealing of the register eliminates dirt and moisture, tampering, and lens fogging problems.

No change gears are required for accuracy calibration. Encoded-type remote reading systems are available for all SR Water Meters. (See back of sheet for additional information.)

TAMPERPROOF FEATURES: Removing the register to obtain free water is prevented by a locking system inside the meter. Removing the register requires a special tool that is available only to water utilities.

MAGNETIC DRIVE: The unique design of the direct magnetic drive is a positive, reliable, dependable drive coupling, proven in millions of SR Water Meters.

OPERATION: Water flows through the meter's strainer and into the measuring chamber where it operates the piston. The piston, which moves freely, oscillates around a central hub, guided by the rubber-coated division plate.

A drive magnet, incorporated in the piston, rotates around the outside of the hermetically sealed register well and magnetically drives the "follower" magnet sealed within the well. The "follower" magnet drives a crank connected to the register gear train, which translates the number of piston oscillations into volume totalization units displayed on the register face.

MAINTENANCE: Invensys Sealed Register® Water Meters are engineered to provide long-term value and virtually maintenance-free operation because of their design simplicity and interchangeability of modules. Invensys SR® Water Meters are easy to repair, even without removing the maincase from the installation. As an alternate to repair by the utility, Invensys offers various maintenance programs which provide factory reconditioning of the maincase and replacement of components at low fixed prices.

CONNECTIONS: Tailpieces/Unions for installing the meters on a variety of pipe types and sizes are available as an option.

GUARANTEE: Invensys SR® Water Meters are backed by "The Invensys Guarantee." Ask your Invensys representative for details, or see Bulletin G-500.

SPECIFICATIONS

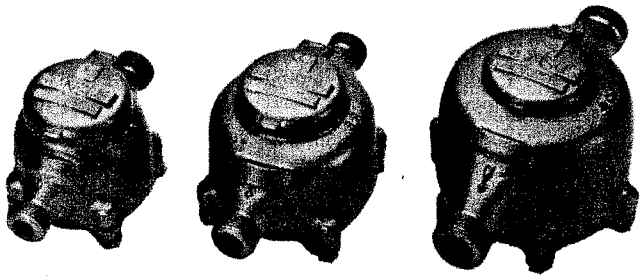

5/8" SR® (DN 15mm) **3/4" SR® (DN 20mm)** **1" SR® (DN 25mm)**

SERVICE	Measurement of cold water with flow in one direction only.
NORMAL OPERATING FLOW RANGE①	5/8" (DN 15mm) size: 1 to 20 gal/min. (0.25 to 4.5 m^3h) 3/4" (DN 20mm) size: 2 to 30 gal/min. (0.45 to 7.0 m^3h) 1" (DN 25mm) size: 3 to 50 gal/min. (0.7 to 11.0 m^3h)
ACCURACY	100% ± 1.5% of actual thruput
LOW FLOW REGISTRATION	5/8" (DN 15mm) size: 95% at 1/4 gal/min. (0.96 m^3h) 3/4" (DN 20mm) size: 95% at 1/2 gal/min. (0.10 m^3h) 1" (DN 25mm) size: 95% at 3/4 gal/min. (0.15 m^3h)
MAXIMUM PRESSURE LOSS	5/8" (DN 15mm) size: 10.8 psi at 20 gal/min. (0.7 bar at 4.5 m^3h) 3/4" (DN 20mm) size: 11.0 psi at 30 gal/min. (0.8 bar at 7.0 m^3h) 1" (DN 25mm) size: 10.9 psi at 50 gal/min. (0.8 bar at 11.0 m^3h)
MAXIMUM OPERATING PRESSURE	150 psi (10.0 bar)
MEASUREMENT ELEMENT	Oscillating piston
REGISTER	Straight reading, hermetically sealed magnetic drive.
REGISTRATION	5/8", 3/4", 1": 10 gallons, 1 cubic foot, 0.01 m^3 or 0.1 m^3/sweep hand revolution. 5/8", 3/4", 1": odometer wheels (10,000 gal., 1,000,000 cubic feet or, 10,000 m^3)
METER CONNECTIONS②	5/8" (DN 15mm) size: 3/4" (26.44mm) threads 5/8" x 3/4" (DN 15mm x 33mm) size: 1" (33.25) threads 3/4" (DN 20mm) size: 1" (33.25mm) threads 3/4" x 1" (DN 20mm x 42mm) size: 1-1/4" (41.91mm) threads 1" x 1-1/4" (DN 25mm x 48mm) size: 1-1/2" (47.75mm) threads (All threads are straight pipe, external type, conforming to ANSI B1.20.1, or ISO R228, if specified.)
MATERIALS③	Maincase—Bronze Measuring chamber—Rocksyn—standard Bronze—optional Bottom plate—Bronze, cast iron or synthetic polymer Magnets—Alnico Trim—Stainless Steel Casing bolts—Stainless Steel Strainer—Thermoplastic

① Maximum rates listed are for intermittent flow only. Maximum continuous flow rates as specified by AWWA are:
5/8" (DN 15mm)—10 gal/min (2.3 m^3h)
3/4" (DN 20mm)—15 gal/min (3.4 m^3h)
1" (DN 25mm)—25 gal/min (5.7 m^3h)

② Unless otherwise noted, 5/8" size and 5/8" x 3/4" characteristics are identical. 5/8" x 3/4" designates 5/8" with 3/4" connection thread. Metric designation is the normal bore x the outside diameter.

③ Synthetic polymer maincase bottom plate available on 5/8" meter only.

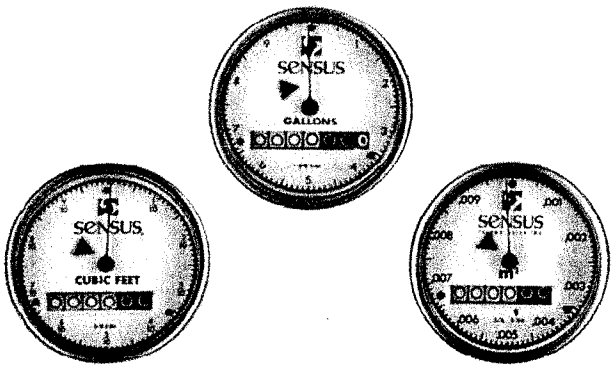

5/8" (DN 15mm) Dials Shown

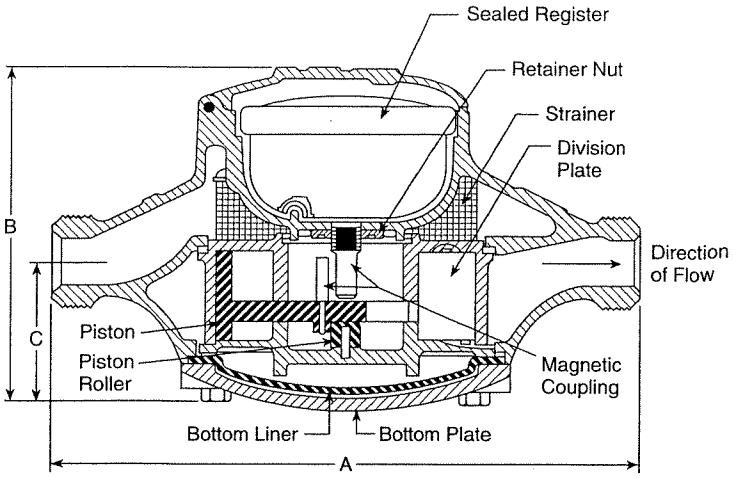

Dimensions and Net Weights

Metric Size	A	B	C	Width	Net Weight①
5/8" (DN 15mm)	7-1/2" (190mm)	4-9/16" (115mm)	2-1/8" (55mm)	4-5/8" (120mm)	5 lb. 12 oz. (2.6 kg)
5/8" x 3/4" (DN 15mm x 33mm)	7-1/2" (190mm)	4-9/16" (115mm)	2-1/8" (55mm)	4-5/8" (120mm)	5 lb. 15 oz. (2.7 kg)
3/4" (DN 20mm)	9" (230mm)	5-1/8" (130mm)	2-9/32" (60mm)	5-1/4" (135mm)	8 lb. (3.6 kg)
3/4" short (DN 20mm)	7-1/2" (190mm)	5-1/8" (130mm)	2-9/32" (60mm)	5-1/4" (135mm)	8 lb. (3.6 kg)
1" (DN 25mm)	10-3/4" (275mm)	5-3/4" (145mm)	2-5/8" (70mm)	6-13/16" (175mm)	12 lb. (5.5 kg)

① With Rocksyn® measuring chamber.

Remote Reading Systems—For use with all sizes of Invensys Water Meters

All Invensys AMR systems work with the same absolute encoder Electronic Communications Registers (ECR), enabling the utility to mix and match or easily move from one system to another without changing registers for each.

The TouchRead® Automated Meter Reading and Billing System—is a multi-purpose encoder remote system suitable for indoor and/or outdoor use. The ECR Register uses a wired connection between the meter and an outside remote for inside set meters—or a pitlid mounted module, enabling underground meters to be read automatically without opening the meter box or vault. All wired connections and terminals of the TouchRead PitLid (TR/PL) modules and registers are fully sealed at the factory using a special process to ensure protection from water infiltration. The connection terminals of ECR/WP registers are also factory sealed.

Meters equipped for TouchRead System reading can be read with a visual reading device, stand alone AutoGun, and/or reading gun with an AutoRead Hand-Held Device. For more information on TouchRead System equipment refer to bulletins AMR-TR, AMR-401, AMR-403, AMR-312 and EXSUMHH.

PhonRead® AMR—is a reliable telephone based call-in system that does not require batteries for operation. It also does note require equipment to be installed at telephone company facilities. PhonRead Meter Interface Units (MIU) automatically call "in" to the utility office for transferring meter reading data from the meter site to a PC. PhonRead is a transparent AMR system that does not interfere with customers' telephone service. For more information refer to bulletins AMR-PR and AMR-302.

RadioRead® AMR—uses superior Direct Sequence Spread Spectrum modulation to provide reliable, safe and virtually interference free radio-based transmission of reading data from underground or inside-set meters that are equipped with Meter Transceiver Units (MXU). A choice of meter reading options is available. A radio frequency hand-held device (RF-HHD) can be used by a meter reader on foot. The RF-HHD can also be used to collect readings from TouchRead equipped meters, or for manual meter reading entries. A more powerful Vehicle Transceiver Unit (VXU) can be used in any car or truck to read meters while on the move. (A dedicated meter reading vehicle is not required.) For more information refer to bulletins AMR-RR, AMR-301 and AMR-303, and AMR-401.

MultiRead® Port Expanders—can provide the capability to connect multiple ECR equipped meters to a single PhonRead MIU or RadioRead MXU to save the utility time and money for installations such as apartment complexes and shopping centers. Refer to bulletin AMR-305, AMR-306 and AMR-308.

invensys
Metering Systems

Invensys Metering Systems
P.O. Box 487
450 N. Gallatin Avenue
Uniontown, PA 15401

1-800-METER-IT
1-800-638-3748

FAX (Direct to Factory)
Local: (724) 439-7729
Toll Free: 1-800-888-2403

Web site: www.ims.invensys.com
select *North American Water*
Email: h2oinfo@ims.invensys.com

AUTHORIZED INVENSYS DISTRIBUTOR

SR® WATER METERS

invensys
Metering Systems

TYPICAL PERFORMANCE CURVES

5/8" and 5/8" x 3/4" SR Meter
UA-5619

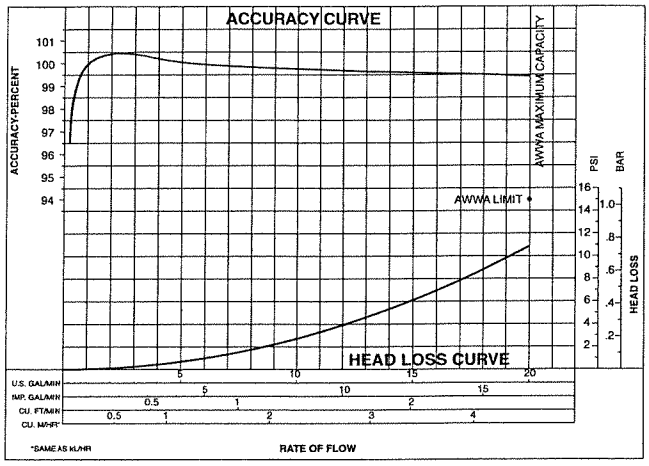

3/4" SR Meter 7-1/2" Laying Length
UA-5831

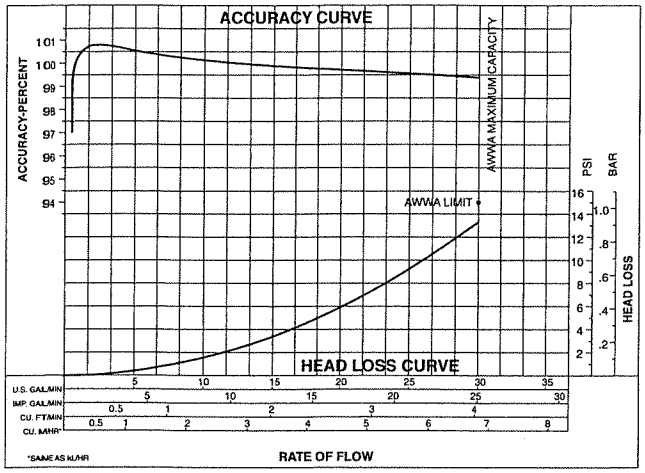

3/4" and 3/4" x 1" SR Meter
UA-5830

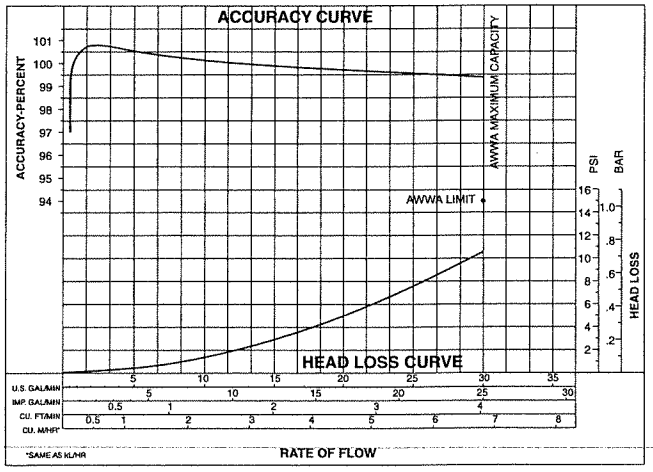

1" and 1" x 1-1/4" SR Meter
UA-5832

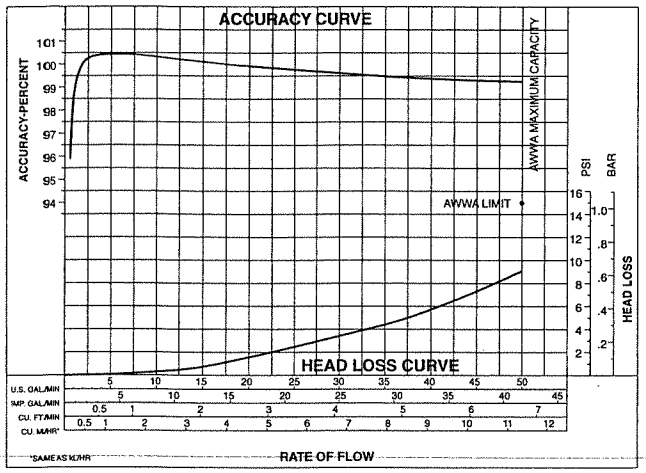

1-1/2" SR Meter
UA-5674

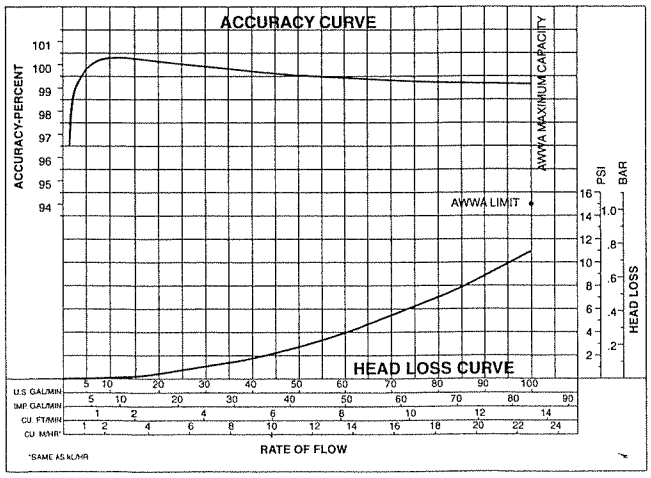

2" SR Meter
UA-5673

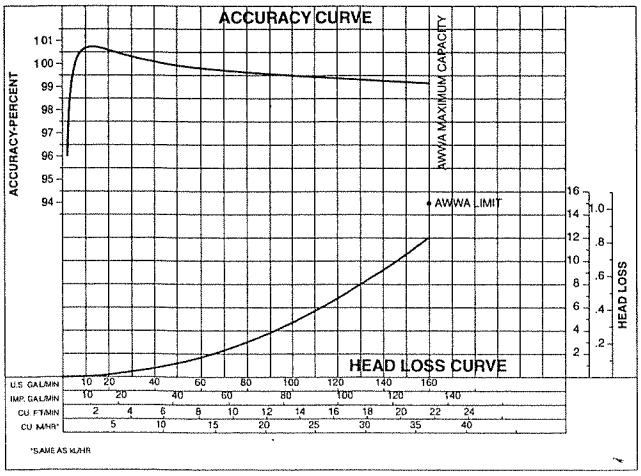

SR® WATER METERS

Invensys
Metering Systems

DISPLACEMENT TYPE MAGNETIC DRIVE COLD WATER METERS
1-1/2" (DN 40mm) and 2" (DN 50mm) Sizes

DESCRIPTION

APPLICATIONS: Measurement of cold water where flow is in one direction; in residential, commercial and industrial services.

CONFORMANCE TO STANDARDS: Invensys Sealed Register Water Meters comply with ANSI/AWWA Standard C700, latest revision. Each meter is tested to insure compliance.

CONSTRUCTION: Invensys SR Water Meters consist of three basic components: maincase; measuring chamber; permanently, hermetically-sealed register. Maincases are of bronze with either flanges or internally-threaded spuds. Measuring chambers are of Rocksyn®, a corrosion-resistant thermoplastic material. Bronze measuring chambers are available as an option.

SEALED REGISTER: Permanently, hermetically sealed; proven magnetic drive design; with integral tamper-proof locking device. Guaranteed for 25 years. The standard register includes a straight-reading, odometer-type totalization display; a 360° test circle with center sweep hand; and a low flow (leak) detector. Gears are self-lubricating, molded plastic for long life and minimum friction. The hermetic sealing of the register eliminates dirt and moisture, tampering, and lens fogging problems.

No change gears are required for accuracy calibration. Encoded-type remote reading systems are available for all SR Water Meters. (See back of sheet for additional information.)

TAMPERPROOF FEATURES: Removing the register to obtain free water is prevented by a locking device inside the meter. Removing the register requires a special tool that is available only to water utilities.

MAGNETIC DRIVE: The unique design of the direct magnetic drive is a positive, reliable, dependable drive coupling, proven in millions of SR Water Meters.

OPERATION: Water flows through the meter's strainer and into the measuring chamber where it operates the piston. The piston, which moves freely, oscillates around a central hub, guided by the rubber-coated division plate.

A drive magnet, incorporated in the piston, rotates around the outside of the hermetically sealed register well and magnetically drives the "follower" magnet sealed within the well. The "follower" magnet drives a crank connected to the register gear train, which translate the number of piston oscillations into volume totalization units displayed on the register face.

MAINTENANCE: Invensys Sealed Register Water Meters are engineered to provide long-term value and virtually maintenance-free operation because of their design simplicity and interchangeability of modules. Invensys SR Water Meters are easy to repair, even without removing the maincase from the installation. As an alternate to repair by the utility, Invensys offers various maintenance programs which provide factory reconditioning of the maincase and replacement of components at low fixed prices.

CONNECTIONS: Tailpieces/Companion Flanges for installing the meters on a variety of pipe and sizes are available as an option. For flanged meters, the use of a Smith-Blair Model 926 Flanged Coupling Adapter is recommended to facilitate the installation and any future removal of the meter from the line.

SPECIFICATIONS

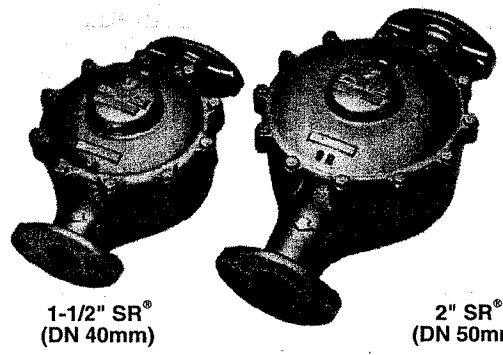

1-1/2" SR® (DN 40mm) **2" SR® (DN 50mm)**

SERVICE	Measurement of cold water with flow in only one direction.
NORMAL OPERATING FLOW RANGE①	1-1/2" (DN 40mm) size: 5 to 100 gal/min. (1.1 to 23.0 m^3h) 2" (DN 50mm) size: 8 to 160 gal/min. (1.8 to 36.0 m^3h)
ACCURACY	100% ± 1.5% of actual thruput
LOW FLOW REGISTRATION	1-1/2" (DN 40mm) size: 95% at 1-1/2 gal/min. (0.35 m^3h) 2" (DN 20mm) size: 95% at 2 gal/min. (0.45 m^3h)
MAXIMUM PRESSURE LOSS	1-1/2" (DN 40mm) size: 11.4 psi at 100 gal/min. (0.8 bar at 23.0 m^3h) 2" (DN 50mm) size: 12.1 psi at 160 gal/min. (0.8 bar at 36.0 m^3h)
MAXIMUM OPERATING PRESSURE	150 psi (10.0 bar)
MEASURING ELEMENT	Oscillating piston
REGISTER	Straight reading, hermetically sealed, magnetic drive with low flow indicator.
REGISTRATION	100,000,000 gallons, 100 gallon/sweep hand revolution 10,000,000 cubic feet 10 cubic feet/sweep hand revolution 100,000 m^3 0.1 m^3/sweep hand revolution
METER CONNECTIONS②	1-1/2" (DN 40mm) size: two bolt oval flanged spuds or 1-1/2" (DN 47.80mm) internal pipe threads 2" (DN 50mm) size: two bolt oval flanged spuds or 2" (59.61mm) internal pipe threads (Threads are taped pipe, internal type, conforming to ANSI B1.20.1 or ISO R-7 if specified. Flanges are AWWA 125 pounds [PN 10 bar] class.)
MATERIALS	Maincase—Bronze Measuring chamber—Rocksyn—standard Bronze—optional Magnets—ceramic and Alnico Strainer—Thermoplastic Trim—Stainless Steel Casing bolts—Stainless Steel

① Maximum rates listed are for intermittent flow only. Maximum continuous flow rates as specified by AWWA are:
1-1/2" (DN 40mm) size: 50 gal/min (11.0 m^3h)
2" (DN 50mm) size: 80 gal/min (18.0 m^3h)

② Flanged spuds are standard for 1-1/2" (DN 40mm) and 2" (DN 50mm) size meters and will be furnished unless otherwise specified. Internal tapped pipe threads only are supplied for ISO meters.

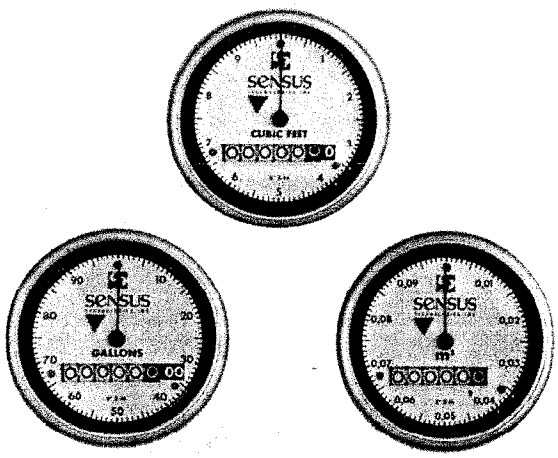

2" (DN 50mm) Dials Shown

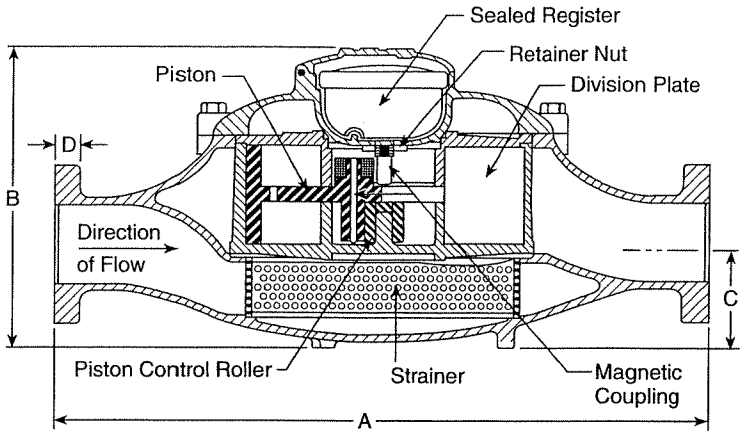

Dimensions and Net Weights

Meter Size	Connections	A	B	C	D	Width	Bolt Circle	Number of Bolts	Bolt Size	Net Weight①
1-1/2" (DN 40mm)	Flanged	13 (330mm)	6-7/8 (175mm)	2-21/32 (68mm)	5/8 (16mm)	8-3/4 (222mm)	4 (102mm)	2	5/8 (16mm)	26 lbs. (12 kg)
	Screwed	12-5/8 (322mm)	6-7/8 (175mm)	2-21/32 (68mm)	N/A②	8-3/4 (222mm)	N/A②	N/A②	N/A②	23 lbs. (10.5 kg)
2" (DN 50mm)	Flanged	17 (432mm)	7-17/32 (192mm)	2-5/8 (67mm)	5/8 (16mm)	9-11/16 (246mm)	4-1/2 (115mm)	2	3/4 (19mm)	42 lbs. (19 kg)
	Screwed	15-1/4 (388mm)	7-17/32 (192mm)	2-5/8 (67mm)	N/A③	9-11/16 (246mm)	N/A③	N/A③	N/A③	37 lbs. (17 kg)

① Rocksyn® measuring chamber.
Meter is available with either flanged or screwed end connections. Flanged end meter illustrated to show oval flange and bolt pattern.
End connection threads:
② 1-1/2" (DN 40mm)—1-1/2" N.P.T. Internal Threads or 1-1/2" ISO R-7 International Threads, if specified
③ 2" (DN 50mm)—2" N.P.T. Internal Threads or 2" **ISO** R-7 International Threads, if specified.

Remote Reading Systems—For use with all sizes of Invensys Water Meters

All Invensys AMR systems work with the same absolute encoder Electronic Communications Registers (ECR), enabling the utility to mix and match or easily move from one system to another without changing registers for each.

The TouchRead® Automated Meter Reading and Billing System—is a multi-purpose encoder remote system suitable for indoor and/or outdoor use. The ECR Register uses a wired connection between the meter and an outside remote for inside set meters—or a pitlid mounted module, enabling underground meters to be read automatically without opening the meter box or vault. All wired connections and terminals of the TouchRead PitLid (TR/PL) modules and registers are fully sealed at the factory using a special process to ensure protection from water infiltration. The connection terminals of ECR/WP registers are also factory sealed.

Meters equipped for TouchRead System reading can be read with a visual reading device, stand alone AutoGun, and/or reading gun with an AutoRead Hand-Held Device. For more information on TouchRead System equipment refer to bulletins AMR-TR, AMR-401, AMR-403, AMR-312 and EXSUMHH.

PhonRead® AMR—is a reliable telephone based call-in system that does not require batteries for operation. It also does note require equipment to be installed at telephone company facilities. PhonRead Meter Interface Units (MIU) automatically call "in" to the utility office for transferring meter reading data from the meter site to a PC. PhonRead is a transparent AMR system that does not interfere with customers' telephone service. For more information refer to bulletins AMR-PR and AMR-302.

RadioRead® AMR—uses superior Direct Sequence Spread Spectrum modulation to provide reliable, safe and virtually interference free radio-based transmission of reading data from underground or inside-set meters that are equipped with Meter Transceiver Units (MXU). A choice of meter reading options is available. A radio frequency hand-held device (RF-HHD) can be used by a meter reader on foot. The RF-HHD can also be used to collect readings from TouchRead equipped meters, or for manual meter reading entries. A more powerful Vehicle Transceiver Unit (VXU) can be used in any car or truck to read meters while on the move. (A dedicated meter reading vehicle is not required.) For more information refer to bulletins AMR-RR, AMR-301 and AMR-303, and AMR-401.

MultiRead® Port Expanders—can provide the capability to connect multiple ECR equipped meters to a single PhonRead MIU or RadioRead MXU to save the utility time and money for installations such as apartment complexes and shopping centers. Refer to bulletin AMR-305, AMR-306 and AMR-308.

invensys
Metering Systems

Invensys Metering Systems
P.O. Box 487
450 N. Gallatin Avenue
Uniontown, PA 15401

1-800-METER-IT
1-800-638-3748

FAX (Direct to Factory)
Local: (724) 439-7729
Toll Free: 1-800-888-2403

Web site: www.ims.invensys.com
select *North American Water*
Email: h2oinfo@ims.invensys.com

AUTHORIZED INVENSYS DISTRIBUTOR

SERIES "W" TURBO METERS

Invensys
Metering Systems

MODEL W-160 DRS
Bronze Magnetic Drive Flanged Ends Size 2" (DN 50mm)

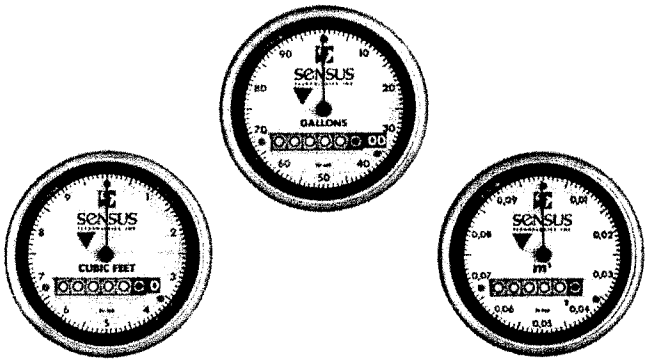

Direct Reading Registers

W-160 DRS Turbo Meter

DESCRIPTION

MODEL: W-160 DRS Turbo Meter is based on the turbine principle of measurement; its operating range is from 4 to 160 gallons per minute (0.9 to 36 m3/h) with registration accuracy of 100% ±1.5% of actual thruput.

CONFORMANCE TO STANDARDS: Invensys Turbo Meters comply with ANSI/AWWA Standard C701 (most recent revision). Each meter is performance tested to insure compliance.

PERFORMANCE: The meter's unique principle of measurement assures extended accuracy life. The W-160 DRS has no restrictions as to sustained flow rates within its operating range. The design permits continuous operation up to its rated maximum flow capacity, without affecting long term accuracy or causing undue wear.

CONSTRUCTION: The meter consists of two basic assemblies—the maincase and the measuring chamber. Straightening vanes in the maincase minimize the swirl upstream of the meter so as to direct the flow evenly to the rotor. The measuring chamber assembly includes the rotor, adjusting vane (for calibration) and sealed Direct Reading (DR) register. The meter includes a built-in strainer and test plug.

MAGNETIC DRIVE: The Right Angle Magnetic Drive eliminates conventional worm or miter gears normally required for horizontally mounted rotors or turbine measuring elements. Registration is accomplished by combining the magnetic actions of a driver magnet (embedded in the rear face of the rotor), a three-legged flux carrier and a cylindrical follower magnet attached to the gear train shaft inside the register's magnet well. Water flowing through the meter causes the rotor (with magnet) to turn; as one of the magnet poles passes one of the flux carrier legs, the magnetic force is transmitted through the flux carrier leg to the follower magnet, causing the register shaft to rotate. The only moving part in water is the rotor assembly.

ROTOR: The thermoplastic rotor with graphite bearing rotates on a chrome plated stainless steel shaft. The rotor assembly is virtually weightless in water, thus adding to bearing life.

MAINTENANCE: The measuring chamber and straightening vanes can be removed, repaired and/or replaced without disturbing the maincase in the line. A spare chamber can be utilized in the event maintenance is required. Cover plates are also available to keep the line in service while the measuring chamber is repaired and recalibrated. A test outlet is provided in the outlet end for ease of flushing or accuracy testing. Factory testing, repair and measuring chamber exchange programs are available.

STRAINER: The Model W-160 DRS Turbo Meter is designed with an integral "V" shaped stainless steel strainer built into its inlet end. A removable cover plate permits easy access to the strainer for routine cleaning.

SPECIFICATIONS

SERVICE	Measurement of cold water up to 80°F (27°C) with flow in one direction only.
OPERATING RANGE	Continuous Flows: 4 to 160 gpm (0.9 to 36 m^3/h) Intermittent Flows: 200 gpm max. (45 m^3/h)
ACCURACY	100% ± 1.5% of actual thruput
LOW FLOW	95% at 3 gpm (0.7 m^3/h)
PRESSURE LOSS	12 psi at 160 gpm (.8 bar at 36 m^3/h)
MAXIMUM OPERATING PRESSURE	150 psi (10.0 bar)
FLANGE	2" size, two-bolt oval, AWWA 125 pound class
REGISTER	Hermetically Sealed Direct Reading Register with Low Flow Indicator
METER REGISTRATION	100,000,000 gallons 100 gallons/sweep hand revolution 10,000,000 cubic feet 10 cubic feet/sweep hand revolution 100,000 m^3 0.1 m^3/sweep hand revolution
MATERIALS	Maincase—Bronze Measuring Chamber—Thermoplastic Straightening Vanes—Thermoplastic Rotor—Thermoplastic Radial Bearing—Graphite Trim—Stainless Steel Thrust Bearings—Tungsten Carbide Magnets—Ceramic Strainer Screen—Stainless Steel Strainer Cover—Bronze Test Plug—1-1/2" Tapered Pipe Threads

SERIES "W" TURBO METERS

MODEL W-160 DRS
Bronze Magnetic Drive Flanged Ends Size 2" (DN 50mm)

Head Loss Curve

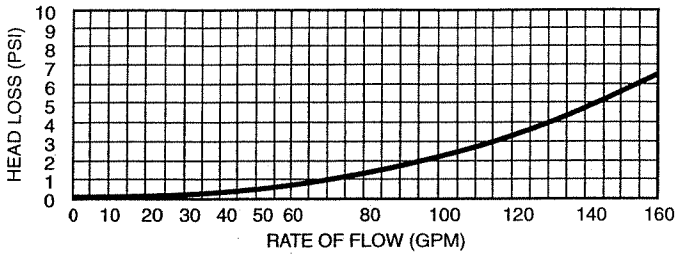

Accuracy Curve

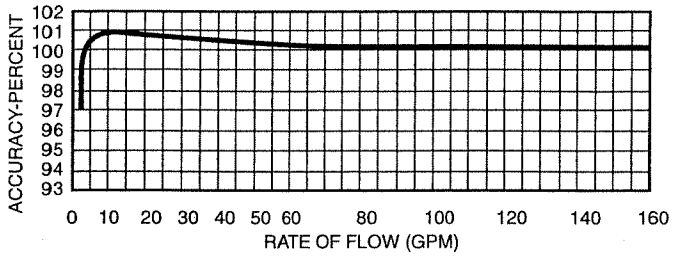

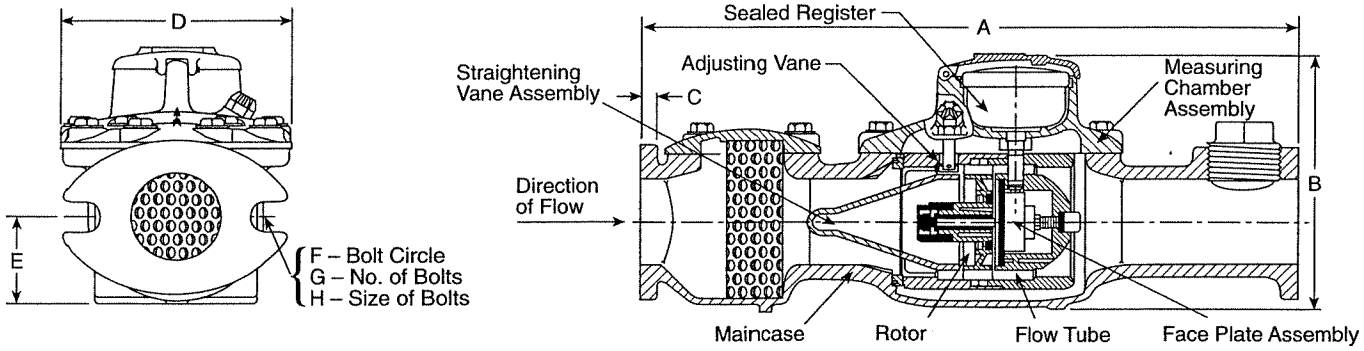

Meter and Pipe Size	Normal Operating Range GPM Minimum	Maximum	Connections	Dimensions A	B	C	D	E	F	G	H	Net Weight	Shipping Weight
2"	4	160①	Flanged	17"	6-3/4"	5/8"	6"	2-5/16"	4"	2	5/8"	40 lbs.	48 lbs.
DN 50mm	0.9m³/h	36m³/h		432mm	172mm	16mm	153mm	59mm	102mm	2	16mm	18 kg	22 kg

① For continuous flows; 200 GPM (45m³/h) maximum for intermittent flows.

Remote Systems—For use with all sizes of Invensys Water Meters

All Invensys AMR systems work with the same absolute encoder Electronic Communications Registers (ECR), enabling the utility to mix and match or easily move from one system to another without changing registers for each.

The TouchRead® Automated Meter Reading and Billing System—is a multi-purpose encoder remote system suitable for indoor and/or outdoor use. The ECR Register uses a wired connection between the meter and an outside remote for inside set meters—or a pitlid mounted module, enabling underground meters to be read automatically without opening the meter box or vault. All wired connections and terminals of the TouchRead PitLid (TR/PL) modules and registers are fully sealed at the factory using a special process to ensure protection from water infiltration. The connection terminals of ECR/WP registers are also factory sealed.

Meters equipped for TouchRead System reading can be read with a visual reading device, stand alone AutoGun, and/or reading gun with an AutoRead Hand-Held Device. For more information on TouchRead System equipment refer to bulletins AMR-TR, AMR-401, AMR-403, AMR-312, EXSUMHH, RS-983, TR-984 and TR-995.

PhonRead® AMR—is a reliable telephone based call-in system that does not require batteries for operation. It also does note require equipment to be installed at telephone company facilities. PhonRead Meter Interface Units (MIU) automatically call "in" to the utility office for transferring meter reading data from the meter site to a PC. PhonRead is a transparent AMR system that does not interfere with customers' telephone service. For more information refer to bulletins AMR-PR and AMR-302.

RadioRead® AMR—uses superior Direct Sequence Spread Spectrum modulation to provide reliable, safe and virtually interference free radio-based transmission of reading data from underground or inside-set meters that are equipped with Meter Transceiver Units (MXU). A choice of meter reading options is available. A radio frequency hand-held device (RF-HHD) can be used by a meter reader on foot. The RF-HHD can also be used to collect readings from TouchRead equipped meters, or for manual meter reading entries. A more powerful Vehicle Transceiver Unit (VXU) can be used in any car or truck to read meters while on the move. (A dedicated meter reading vehicle is not required.) For more information refer to bulletins AMR-RR, AMR-301 and AMR-303, and AMR-401.

MultiRead® Port Expanders—can provide the capability to connect multiple ECR equipped meters to a single PhonRead MIU or RadioRead MXU to save the utility time and money for installations such as apartment complexes and shopping centers. Refer to bulletin AMR-305, AMR-306 and AMR-308.

invensys
Metering Systems

Invensys Metering Systems
P.O. Box 487
450 N. Gallatin Avenue
Uniontown, PA 15401

1-800-METER-IT
1-800-638-3748

FAX (Direct to Factory)
Local: (724) 439-7729
Toll Free: 1-800-888-2403

Web site: www.ims.invensys.com
select *North American Water*
Email: h2oinfo@ims.invensys.com

AUTHORIZED INVENSYS DISTRIBUTOR

SERIES "W" TURBO METERS

Invensys
Metering Systems

MODEL W-350 DRS
Bronze Magnetic Drive Flanged Ends Size 3" (DN 80mm)

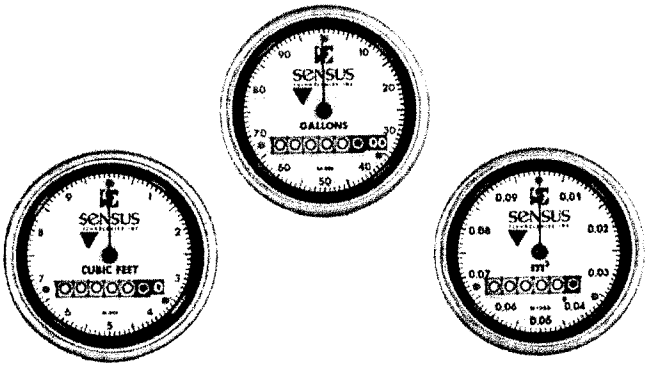

Direct Reading Registers

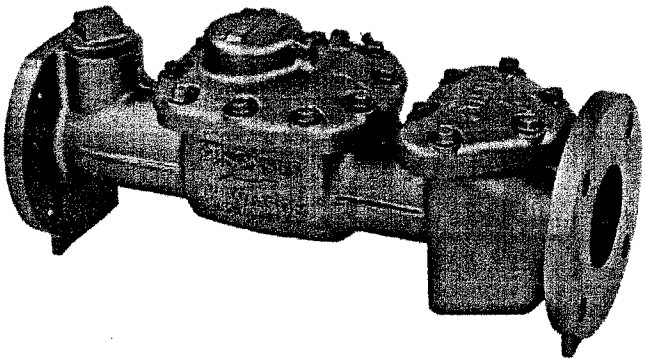

W-350 DRS Turbo Meter

DESCRIPTION

MODEL: W-350 DRS Turbo Meter is based on the turbine principle of measurement; its operating range is from 5 to 350 gallons per minute (1.1 to 80 m³/h) with registration accuracy of 100% ±1.5% of actual thruput.

CONFORMANCE TO STANDARDS: Invensys Turbo Meters comply with ANSI/AWWA Standard C701 (most recent revision). Each meter is performance tested to insure compliance.

PERFORMANCE: The meter's unique principle of measurement assures extended accuracy life. The W-350 DRS has no restrictions as to sustained flow rates within its operating range. The design permits continuous operation up to its rated maximum flow capacity, without affecting long term accuracy or causing undue wear.

CONSTRUCTION: The meter consists of two basic assemblies—the maincase and the measuring chamber. Straightening vanes in the maincase minimize the swirl upstream of the meter so as to direct the flow evenly to the rotor. The measuring chamber assembly includes the rotor, adjusting vane (for calibration) and sealed Direct Reading (DR) register.

MAGNETIC DRIVE: The Right Angle Magnetic Drive eliminates conventional worm or miter gears normally required for horizontally mounted rotors or turbine measuring elements. Registration is accomplished by combining the magnetic actions of a driver magnet (embedded in the rear face of the rotor), a three-legged flux carrier and a cylindrical follower magnet attached to the gear train shaft inside the register's magnet well. Water flowing through the meter causes the rotor (with magnet) to turn; as one of the magnet poles passes one of the flux carrier legs, the magnetic force is transmitted through the flux carrier leg to the follower magnet, causing the register shaft to rotate. The only moving part in water is the rotor assembly.

ROTOR: The thermoplastic rotor with graphite bearing rotates on a chrome plated stainless steel shaft. The rotor assembly is virtually weightless in water, thus adding to bearing life.

MAINTENANCE: The measuring chamber and straightening vanes can be removed, repaired and/or replaced without disturbing the maincase in the line. A spare chamber can be utilized in the event maintenance is required. Cover plates are also available to keep the line in service while the measuring chamber is repaired and recalibrated. A test outlet is provided in the outlet end for ease of flushing or accuracy testing. Factory testing, repair and measuring chamber exchange programs are available.

STRAINER: The Model W-350 DRS Turbo Meter is designed with an integral "V" shaped stainless steel strainer built into its inlet end. A removable cover plate permits easy access to the strainer for routine cleaning.

SPECIFICATIONS

SERVICE	Measurement of cold water up to 80°F (27°C) with flow in one direction only.
OPERATING RANGE	Continuous Flows: 5 to 350 gpm (1.1 to 80 m³/h) Intermittent Flows: 450 gpm max. (100 m³/h)
ACCURACY	100% ± 1.5% of actual thruput
LOW FLOW	95% at 4 gpm (0.9 m³/h)
PRESSURE LOSS	7.1 psi at 350 gpm (.5 bar at 80 m³/h)
MAXIMUM OPERATING PRESSURE	150 psi (10.0 bar)
FLANGE	3" U.S. ANSI B 16.1 Class 125. Optional drillings, if specified, British Standard B.S. 10 or metric standard ISO R2084
REGISTER	Hermetically Sealed Direct Reading Register with Low Flow Indicator.
METER REGISTRATION	100,000,000 gallons 100 gallons/sweep hand revolution 10,000,000 cubic feet 10 cubic feet/sweep hand revolution 100,000 m³ 0.1 m³/sweep hand revolution
MATERIALS	Maincase—Bronze Measuring Chamber—Thermoplastic Straightening Vanes—Thermoplastic Rotor—Thermoplastic Radial Bearing—Graphite Trim—Stainless Steel Thrust Bearings—Tungsten Carbide Magnets—Ceramic Strainer Screen—Stainless Steel Strainer Cover—Bronze Test Plug—2" Tapered Pipe Threads

SERIES "W" TURBO METERS

MODEL W-350 DRS
Bronze Magnetic Drive Flanged Ends Size 3" (DN 80mm)

Head Loss Curve

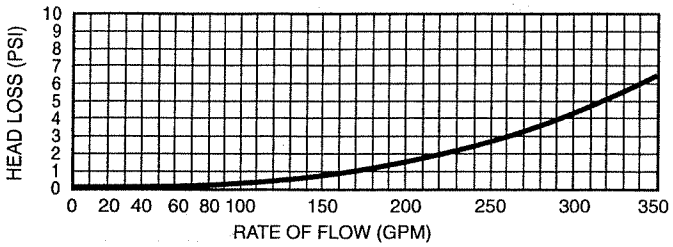

Accuracy Curve

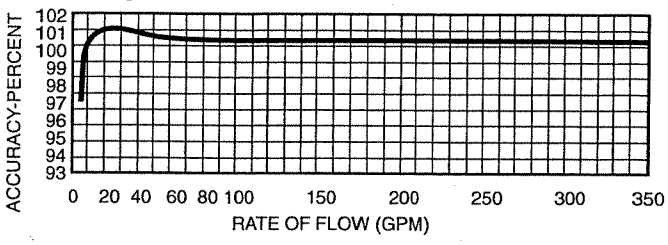

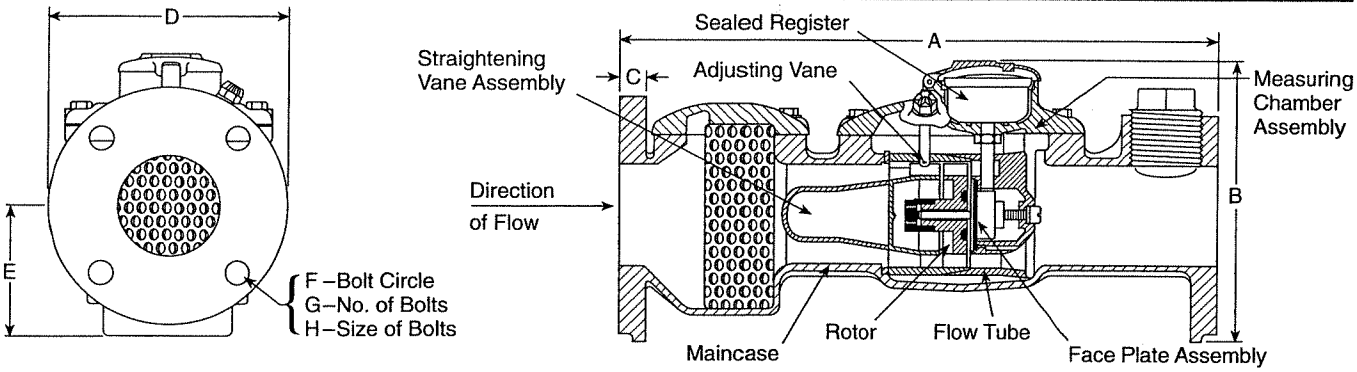

Meter and Pipe Size	Normal Operating Range GPM Minimum	Maximum	Dimensions									Net Weight	Shipping Weight
			Connections	A	B	C	D	E	F	G	H		
3" DN 80mm	5 1.1m³/h	350① 80m³/h	Flanged	19"	8-3/4"	3/4"	7-1/2"	4"	6"	4	5/8"	53 lbs.	60 lbs.
				485mm	222mm	19mm	190mm	102mm	153mm	4	16mm	24 kg	28 kg

① For continuous flows; 450 GPM (100m³/h) maximum for intermittent flows.

Remote Systems—For use with all sizes of Invensys Water Meters

AAll Invensys AMR systems work with the same absolute encoder Electronic Communications Registers (ECR), enabling the utility to mix and match or easily move from one system to another without changing registers for each.

The TouchRead® Automated Meter Reading and Billing System—is a multipurpose encoder remote system suitable for indoor and/or outdoor use. The ECR Register uses a wired connection between the meter and an outside remote for inside set meters—or a pitlid mounted module, enabling underground meters to be read automatically without opening the meter box or vault. All wired connections and terminals of the TouchRead PitLid (TR/PL) modules and registers are fully sealed at the factory using a special process to ensure protection from water infiltration. The connection terminals of ECR/WP registers are also factory sealed.

Meters equipped for TouchRead System reading can be read with a visual reading device, stand alone AutoGun, and/or reading gun with an AutoRead Hand-Held Device. For more information on TouchRead System equipment refer to bulletins AMR-TR, AMR-401, AMR-403, AMR-312 and EXSUMHH.

PhonRead® AMR—is a reliable telephone based call-in system that does not require batteries for operation. It also does note require equipment to be installed at telephone company facilities. PhonRead Meter Interface Units (MIU) automatically call "in" to the utility office for transferring meter reading data from the meter site to a PC. PhonRead is a transparent AMR system that does not interfere with customers' telephone service. For more information refer to bulletins AMR-PR and AMR-302.

RadioRead® AMR—uses superior Direct Sequence Spread Spectrum modulation to provide reliable, safe and virtually interference free radio-based transmission of reading data from underground or inside-set meters that are equipped with Meter Transceiver Units (MXU). A choice of meter reading options is available. A radio frequency hand-held device (RF-HHD) can be used by a meter reader on foot. The RF-HHD can also be used to collect readings from TouchRead equipped meters, or for manual meter reading entries. A more powerful Vehicle Transceiver Unit (VXU) can be used in any car or truck to read meters while on the move. (A dedicated meter reading vehicle is not required.) For more information refer to bulletins AMR-RR, AMR-301 and AMR-303, and AMR-401.

MultiRead® Port Expanders—can provide the capability to connect multiple ECR equipped meters to a single PhonRead MIU or RadioRead MXU to save the utility time and money for installations such as apartment complexes and shopping centers. Refer to bulletin AMR-305, AMR-306 and AMR-308.

invensys
Metering Systems

Invensys Metering Systems
P.O. Box 487
450 N. Gallatin Avenue
Uniontown, PA 15401

1-800-METER-IT
1-800-638-3748

FAX (Direct to Factory)
Local: (724) 439-7729
Toll Free: 1-800-888-2403

Web site: www.ims.invensys.com
select *North American Water*
Email: h2oinfo@ims.invensys.com

AUTHORIZED INVENSYS DISTRIBUTOR

SERIES "W" TURBO METERS

Invensys
Metering Systems

MODEL W-1000 DRS
Bronze Magnetic Drive Flanged Ends Size 4" (DN 100mm)

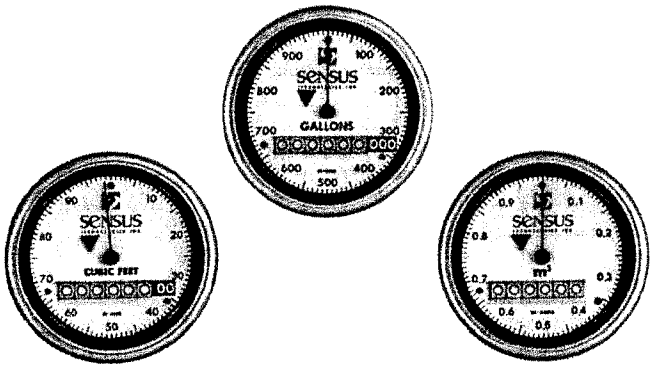

Direct Reading Registers

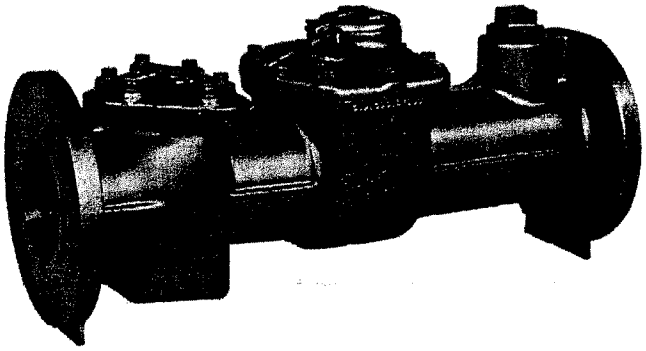

W-1000 DRS Turbo Meter

DESCRIPTION

MODEL: W-1000 DRS Turbo Meter is based on the turbine principle of measurement; its operating range is from 15 to 1000 gallons per minute (3.4 to 225 m^3/h) with registration accuracy of 100% ±1.5% of actual thruput.

CONFORMANCE TO STANDARDS: Invensys Turbo Meters comply with ANSI/AWWA Standard C701 (most recent revision). Each meter is performance tested to insure compliance.

PERFORMANCE: The meter's unique principle of measurement assures extended accuracy life. The W-1000 DRS has no restrictions as to sustained flow rates within its operating range. The design permits continuous operation up to its rated maximum flow capacity, without affecting long term accuracy or causing undue wear.

CONSTRUCTION: The meter consists of two basic assemblies—the maincase and the measuring chamber. Straightening vanes in the maincase minimize the swirl upstream of the meter so as to direct the flow evenly to the rotor. The measuring chamber assembly includes the rotor, adjusting vane (for calibration) and sealed Direct Reading (DR) register.

MAGNETIC DRIVE: The Right Angle Magnetic Drive eliminates conventional worm or miter gears normally required for horizontally mounted rotors or turbine measuring elements. Registration is accomplished by combining the magnetic actions of a driver magnet (embedded in the rear face of the rotor), a three-legged flux carrier and a cylindrical follower magnet attached to the gear train shaft inside the register's magnet well. Water flowing through the meter causes the rotor (with magnet) to turn; as one of the magnet poles passes one of the flux carrier legs, the magnetic force is transmitted through the flux carrier leg to the follower magnet, causing the register shaft to rotate. The only moving part in water is the rotor assembly.

ROTOR: The thermoplastic rotor with graphite bearing rotates on a chrome plated stainless steel shaft. The rotor assembly is virtually weightless in water, thus adding to bearing life.

MAINTENANCE: The measuring chamber and straightening vanes can be removed, repaired and/or replaced without disturbing the maincase in the line. A spare chamber can be utilized in the event maintenance is required. Cover plates are also available to keep the line in service while the measuring chamber is repaired and recalibrated. A test outlet is provided in the outlet end for ease of flushing or accuracy testing. Factory testing, repair and measuring chamber exchange programs are available.

STRAINER: The Model W-1000 DRS Turbo Meter is designed with an integral "V" shaped stainless steel strainer built into its inlet end. A removable cover plate permits easy access to the strainer for routine cleaning.

SPECIFICATIONS

SERVICE	Measurement of potable cold water with flow in one direction only.
OPERATING RANGE	Continuous Flows: 15 to 1000 gpm (3.4 to 225 m^3/h) Intermittent Flows: 1250 gpm max. (285 m^3/h)
ACCURACY	100% ± 1.5% of actual thruput
LOW FLOW	95% at 10 gpm (2.3 m^3/h)
PRESSURE LOSS	6.3 psi at 1000 gpm (.4 bar at 225 m^3/h)
MAXIMUM OPERATING PRESSURE	150 psi (10.0 bar)
FLANGE	4" U.S. ANSI B 16.1 Class 125. Optional drillings, if specified, British Standard B.S. 10 or metric standard ISO R2084
REGISTER	Hermetically Sealed Direct Reading Register with Low Flow Indicator.
METER REGISTRATION	1,000,000,000 gallons 1,000 gallons/sweep hand revolution 100,000,000 cubic feet 100 cubic feet/sweep hand revolution 1,000,000 m^3 1 m^3/h sweep hand revolution
MATERIALS	Maincase—Bronze Measuring Chamber—Thermoplastic Straightening Vanes—Thermoplastic Rotor—Thermoplastic Radial Bearing—Graphite Trim—Stainless Steel Thrust Bearings—Tungsten Carbide Magnets—Ceramic Strainer Screen—Stainless steel Strainer Cover—Bronze Test Plug—2" Tapered Pipe Threads

SERIES "W" TURBO METERS

MODEL W-1000 DRS
Bronze Magnetic Drive Flanged Ends Size 4" (DN 100mm)

Head Loss Curve

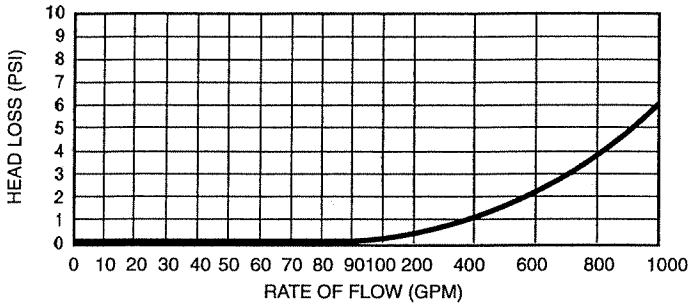

Accuracy Curve

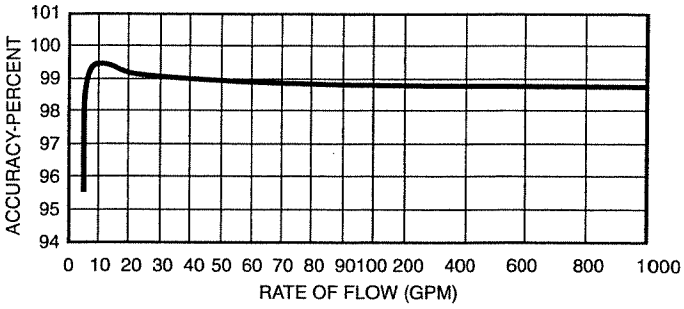

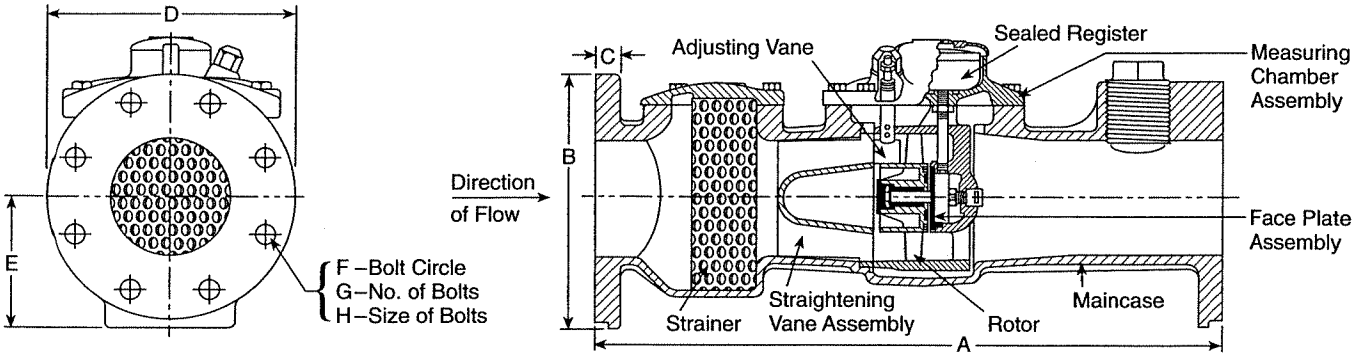

Meter and Pipe Size	Normal Operating Range GPM Minimum	Maximum	Connections	Dimensions A	B	C	D	E	F	G	H	Net Weight	Shipping Weight
4"	15	1000①	Flanged	23"	10-7/8"	7/8"	9"	4-3/4"	7-1/2"	8	5/8"	77 lbs.	85 lbs.
DN 100mm	3.4m³/h	225m³/h		584mm	227mm	22mm	229mm	121mm	191mm	8	16mm	35 kg	39 kg

Remote Systems—For use with all sizes of Invensys Water Meters

All Invensys AMR systems work with the same absolute encoder Electronic Communications Registers (ECR), enabling the utility to mix and match or easily move from one system to another without changing registers for each.

The TouchRead® Automated Meter Reading and Billing System—is a multi-purpose encoder remote system suitable for indoor and/or outdoor use. The ECR Register uses a wired connection between the meter and an outside remote for inside set meters—or a pitlid mounted module, enabling underground meters to be read automatically without opening the meter box or vault. All wired connections and terminals of the TouchRead PitLid (TR/PL) modules and registers are fully sealed at the factory using a special process to ensure protection from water infiltration. The connection terminals of ECR/WP registers are also factory sealed.

Meters equipped for TouchRead System reading can be read with a visual reading device, stand alone AutoGun, and/or reading gun with an AutoRead Hand-Held Device. For more information on TouchRead System equipment refer to bulletins AMR-TR, AMR-401, AMR-403, AMR-312 and EXSUMHH.

PhonRead® AMR—is a reliable telephone based call-in system that does not require batteries for operation. It also does note require equipment to be installed at telephone company facilities. PhonRead Meter Interface Units (MIU) automatically call "in" to the utility office for transferring meter reading data from the meter site to a PC. PhonRead is a transparent AMR system that does not interfere with customers' telephone service. For more information refer to bulletins AMR-PR and AMR-302.

RadioRead® AMR—uses superior Direct Sequence Spread Spectrum modulation to provide reliable, safe and virtually interference free radio-based transmission of reading data from underground or inside-set meters that are equipped with Meter Transceiver Units (MXU). A choice of meter reading options is available. A radio frequency hand-held device (RF-HHD) can be used by a meter reader on foot. The RF-HHD can also be used to collect readings from TouchRead equipped meters, or for manual meter reading entries. A more powerful Vehicle Transceiver Unit (VXU) can be used in any car or truck to read meters while on the move. (A dedicated meter reading vehicle is not required.) For more information refer to bulletins AMR-RR, AMR-301 and AMR-303, and AMR-401.

MultiRead® Port Expanders—can provide the capability to connect multiple ECR equipped meters to a single PhonRead MIU or RadioRead MXU to save the utility time and money for installations such as apartment complexes and shopping centers. Refer to bulletin AMR-305, AMR-306 and AMR-308.

invensys
Metering Systems

Invensys Metering Systems
P.O. Box 487
450 N. Gallatin Avenue
Uniontown, PA 15401

1-800-METER-IT
1-800-638-3748

FAX (Direct to Factory)
Local: (724) 439-7729
Toll Free: 1-800-888-2403

Web site: www.ims.invensys.com
select *North American Water*
Email: h2oinfo@ims.invensys.com

AUTHORIZED INVENSYS DISTRIBUTOR

SERIES "W" TURBO METERS

Invensys
Metering Systems

MODEL W-2000 DR
Bronze Magnetic Drive Flanged Ends Size 6" (DN 150mm)

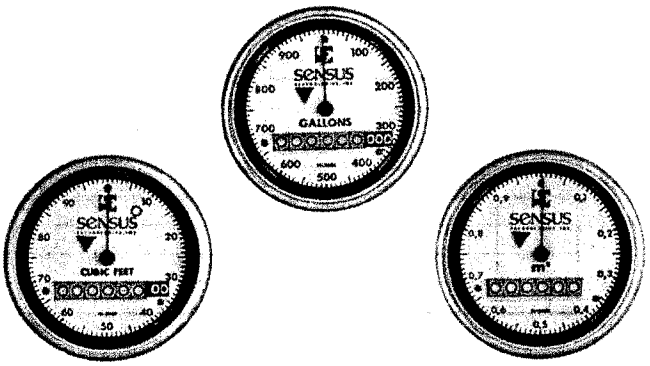

Direct Reading Registers

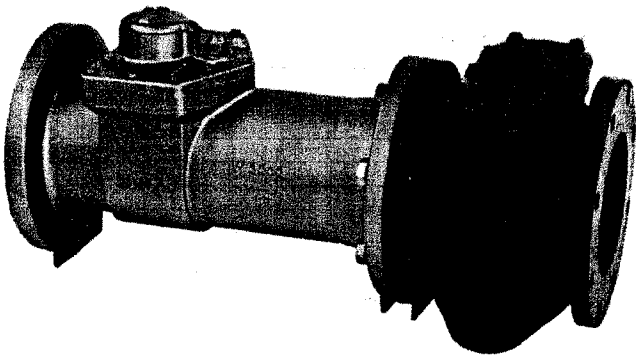

W-2000 DR Turbo Meter with AWWA Strainer

DESCRIPTION

MODEL: W-2000 DR Turbo Meter is based on the turbine principle of measurement; its operating range is from 30 to 2000 gallons per minute (6.8 to 450 m3/h) with registration accuracy of 100% ±1.5% of actual thruput.

CONFORMANCE TO STANDARDS: Invensys Turbo Meters comply with ANSI/AWWA Standard C701 (most recent revision). Each meter is performance tested to insure compliance.

PERFORMANCE: The meter's unique principle of measurement assures extended accuracy life. The W-2000 DR has no restrictions as to sustained flow rates within its operating range. The design permits continuous operation up to its rated maximum flow capacity, without affecting long term accuracy or causing undue wear.

CONSTRUCTION: The meter consists of two basic assemblies—the maincase and the measuring chamber. Straightening vanes in the maincase minimize the swirl upstream of the meter so as to direct the flow evenly to the rotor. The measuring chamber assembly includes the rotor, adjusting vane (for calibration) and sealed Direct Reading (DR) register.

MAGNETIC DRIVE: The Right Angle Magnetic Drive eliminates conventional worm or miter gears normally required for horizontally mounted rotors or turbine measuring elements. Registration is accomplished by combining the magnetic actions of a driver magnet (embedded in the rear face of the rotor), a three-legged flux carrier and a cylindrical follower magnet attached to the gear train shaft inside the register's magnet well. Water flowing through the meter causes the rotor (with magnet) to turn; as one of the magnet poles passes one of the flux carrier legs, the magnetic force is transmitted through the flux carrier leg to the follower magnet, causing the register shaft to rotate. The only moving part in water is the rotor assembly.

ROTOR: The thermoplastic rotor with graphite bearing rotates on a chrome plated stainless steel shaft. The rotor assembly is virtually weightless in water, thus adding to bearing life.

MAINTENANCE: The measuring chamber and straightening vanes can be removed, repaired and/or replaced without disturbing the maincase in the line. A spare chamber can be utilized in the event maintenance is required. Cover plates are also available to keep the line in service while the measuring chamber is repaired and recalibrated. Factory testing, repair and measuring chamber exchange programs are available.

STRAINER: The meter comes equipped with an AWWA type strainer and must be installed immediately upstream of the meter. Invensys recommends the use of an approved strainer with this meter.

SPECIFICATIONS

SERVICE	Measurement of potable cold water with flow in one direction only.
OPERATING RANGE	Continuous Flows: 30 to 2000 gpm (6.8 to 450 m^3/h) Intermittent Flows: 2500 gpm max. (570 m^3/h)
ACCURACY	100% ± 1.5% of actual thruput
LOW FLOW	95% at 20 gpm (4.5 m^3/h)
PRESSURE LOSS	Meter and Strainer—6.2 psi at 2000 gpm (.4 bar at 450 m^3/h)
MAXIMUM OPERATING PRESSURE	150 psi (10.0 bar)
FLANGE	6" U.S. ANSI B 16.1 Class 125. Optional drillings, if specified, British Standard B.S. 10 or metric standard ISO R2084
REGISTER	Hermetically Sealed Direct Reading Register with Low Flow Indicator
METER REGISTRATION	1,000,000,000 gallons 1,000 gallons/sweep hand revolution 100,000,000 cubic feet 100 cubic feet/sweep hand revolution 1,000,000 m^3 1 m^3/sweep hand revolution
MATERIALS	Maincase—Bronze Measuring Chamber—Bronze Straightening Vanes—Stainless Steel Rotor—Thermoplastic Radial Bearing—Ceramic Trim—Stainless Steel Thrust Bearings—Tungsten Carbide Magnets—Ceramic
STRAINER MATERIALS	Body and Cover—Cast Iron (Bronze optional) Screen—Stainless Steel

SERIES "W" TURBO METERS

MODEL W-2000 DR
Bronze Magnetic Drive Flanged Ends Size 6" (DN 150mm)

Head Loss Curve

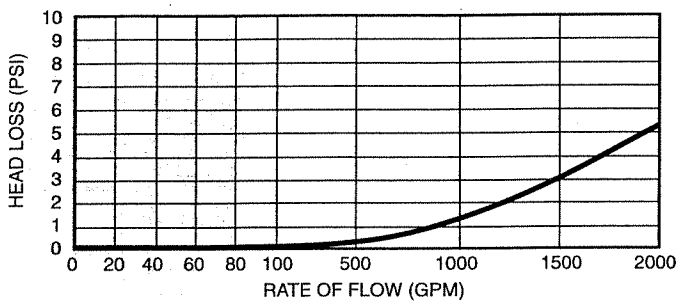

Accuracy Curve

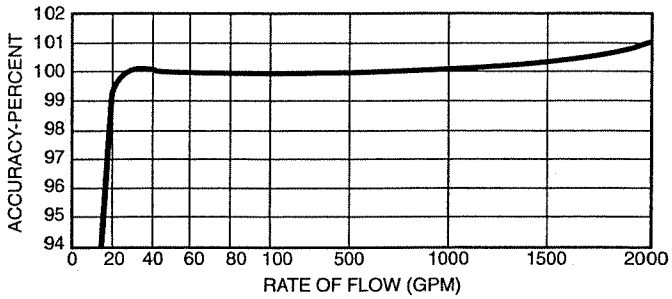

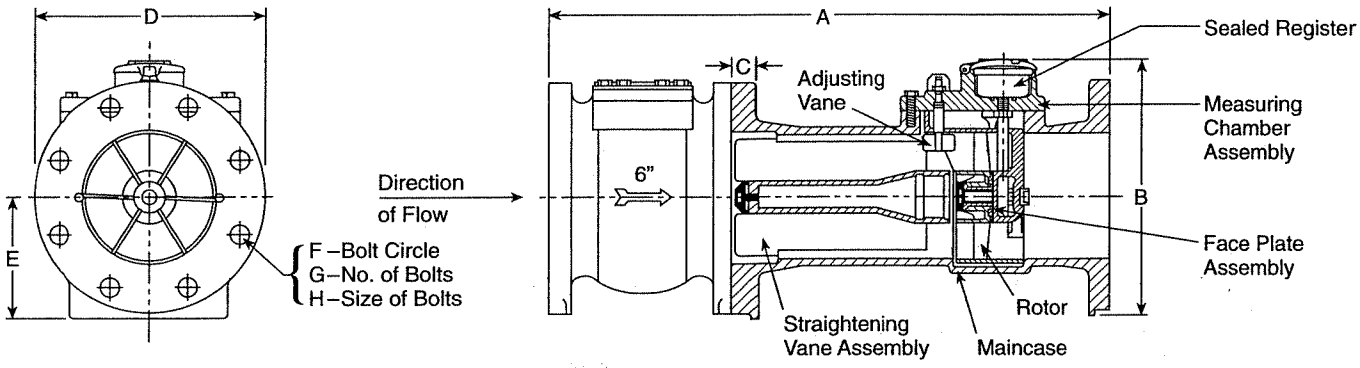

Meter and Pipe Size	Normal Operating Range GPM Minimum	Maximum	Dimensions									Net Weight	Shipping Weight
			Connections	A	B	C	D	E	F	G	H		
6"	30	2000①	Flanged	27-1/8"	13"	7/8"	11"	5-3/4"	9-1/2"	8	3/4"	174 lbs.	205 lbs.
DN 150mm	6.8m³/h	450m³/h		690mm	330mm	22mm	280mm	146mm	242mm	8	19mm	86 kg	93 kg

① For continuous flows; 2000 GPM (570m³/h) maximum for intermittent flows.

Remote Systems—For use with all sizes of Invensys Water Meters

All Invensys AMR systems work with the same absolute encoder Electronic Communications Registers (ECR), enabling the utility to mix and match or easily move from one system to another without changing registers for each.

The TouchRead® Automated Meter Reading and Billing System—is a multi-purpose encoder remote system suitable for indoor and/or outdoor use. The ECR Register uses a wired connection between the meter and an outside remote for inside set meters—or a pitlid mounted module, enabling underground meters to be read automatically without opening the meter box or vault. All wired connections and terminals of the TouchRead PitLid (TR/PL) modules and registers are fully sealed at the factory using a special process to ensure protection from water infiltration. The connection terminals of ECR/WP registers are also factory sealed.

Meters equipped for TouchRead System reading can be read with a visual reading device, stand alone AutoGun, and/or reading gun with an AutoRead Hand-Held Device. For more information on TouchRead System equipment refer to bulletins AMR-TR, AMR-401, AMR-403, AMR-312, EXSUMHH, RS-983, TR-984 and TR-995.

PhonRead® AMR—is a reliable telephone based call-in system that does not require batteries for operation. It also does note require equipment to be installed at telephone company facilities. PhonRead Meter Interface Units (MIU) automatically call "in" to the utility office for transferring meter reading data from the meter site to a PC. PhonRead is a transparent AMR system that does not interfere with customers' telephone service. For more information refer to bulletins AMR-PR and AMR-302.

RadioRead® AMR—uses superior Direct Sequence Spread Spectrum modulation to provide reliable, safe and virtually interference free radio-based transmission of reading data from underground or inside-set meters that are equipped with Meter Transceiver Units (MXU). A choice of meter reading options is available. A radio frequency hand-held device (RF-HHD) can be used by a meter reader on foot. The RF-HHD can also be used to collect readings from TouchRead equipped meters, or for manual meter reading entries. A more powerful Vehicle Transceiver Unit (VXU) can be used in any car or truck to read meters while on the move. (A dedicated meter reading vehicle is not required.) For more information refer to bulletins AMR-RR, AMR-301 and AMR-303, and AMR-401.

MultiRead® Port Expanders—can provide the capability to connect multiple ECR equipped meters to a single PhonRead MIU or RadioRead MXU to save the utility time and money for installations such as apartment complexes and shopping centers. Refer to bulletin AMR-305, AMR-306 and AMR-308.

invensys
Metering Systems

Invensys Metering Systems
P.O. Box 487
450 N. Gallatin Avenue
Uniontown, PA 15401

1-800-METER-IT
1-800-638-3748

FAX (Direct to Factory)
Local: (724) 439-7729
Toll Free: 1-800-888-2403

Web site: www.ims.invensys.com
select *North American Water*
Email: h2oinfo@ims.invensys.com

AUTHORIZED INVENSYS DISTRIBUTOR

SERIES "W" TURBO METERS

Invensys
Metering Systems

MODEL W-3500 DR
Bronze Magnetic Drive Flanged Ends Size 8" (DN 200mm)

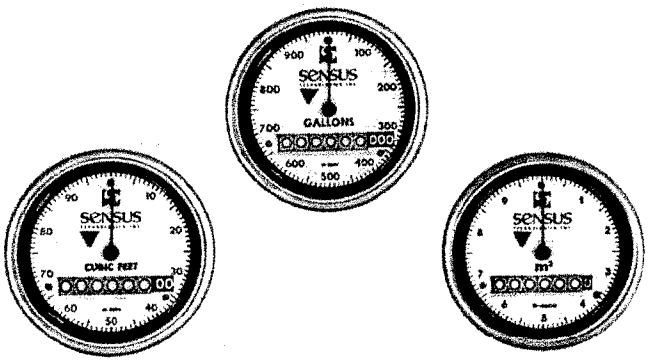

Direct Reading Registers

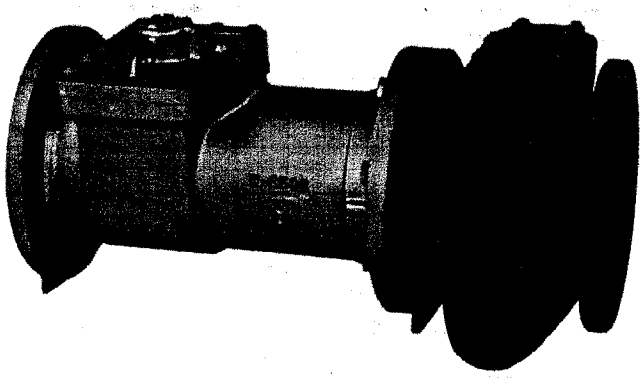

W-3500 DR Turbo Meter with AWWA Strainer

DESCRIPTION

MODEL: W-3500 DR Turbo Meter is based on the turbine principle of measurement; its operating range is from 35 to 3500 gallons per minute (8 to 795 m3/h) with registration accuracy of 100% ±1.5% of actual thruput.

CONFORMANCE TO STANDARDS: Invensys Turbo Meters comply with ANSI/AWWA Standard C701 (most recent revision). Each meter is performance tested to insure compliance.

PERFORMANCE: The meter's unique principle of measurement assures extended accuracy life. The W-3500 DR has no restrictions as to sustained flow rates within its operating range. The design permits continuous operation up to its rated maximum flow capacity, without affecting long term accuracy or causing undue wear.

CONSTRUCTION: The meter consists of two basic assemblies—the maincase and the measuring chamber. Straightening vanes in the maincase minimize the swirl upstream of the meter so as to direct the flow evenly to the rotor. The measuring chamber assembly includes the rotor, adjusting vane (for calibration) and sealed Direct Reading (DR) register.

MAGNETIC DRIVE: The Right Angle Magnetic Drive eliminates conventional worm or miter gears normally required for horizontally mounted rotors or turbine measuring elements. Registration is accomplished by combining the magnetic actions of a driver magnet (embedded in the rear face of the rotor), a three-legged flux carrier and a cylindrical follower magnet attached to the gear train shaft inside the register's magnet well. Water flowing through the meter causes the rotor (with magnet) to turn; as one of the magnet poles passes one of the flux carrier legs, the magnetic force is transmitted through the flux carrier leg to the follower magnet, causing the register shaft to rotate. The only moving part in water is the rotor assembly.

ROTOR: The thermoplastic rotor with graphite bearing rotates on a chrome plated stainless steel shaft. The rotor assembly is virtually weightless in water, thus adding to bearing life.

MAINTENANCE: The measuring chamber and straightening vanes can be removed, repaired and/or replaced without disturbing the maincase in the line. A spare chamber can be utilized in the event maintenance is required. Cover plates are also available to keep the line in service while the measuring chamber is repaired and recalibrated. Factory testing, repair and measuring chamber exchange programs are available.

STRAINER: The meter comes equipped with an AWWA type strainer and must be installed immediately upstream of the meter. Invensys recommends the use of an approved strainer with this meter.

SPECIFICATIONS

SERVICE	Measurement of potable cold water with flow in one direction only.
OPERATING RANGE	Continuous Flows: 35 to 3500 gpm (8 to 795 m^3/h) Intermittent Flows: 4400 gpm max. (998 m^3/h)
ACCURACY	100% ± 1.5% of actual thruput
LOW FLOW	95% at 30 gpm (6.8 m^3/h)
PRESSURE LOSS	Meter and Strainer—8.3 psi at 3500 gpm (.6 bar at 800 m^3/h)
MAXIMUM OPERATING PRESSURE	150 psi (10.0 bar)
FLANGE	8" U.S. ANSI B 16.1 Class 125. Optional drillings, if specified, British Standard B.S. 10 or metric standard ISO R2084
REGISTER	Hermetically Sealed Direct Reading Register with Low Flow Indicator
METER REGISTRATION	1,000,000,000 gallons 1,000 gallons/sweep hand revolution 100,000,000 cubic feet 100 cubic feet/sweep hand revolution 10,000,000 m^3 10 m^3/sweep hand revolution
MATERIALS	Maincase—Bronze Measuring Chamber—Bronze Straightening Vanes—Stainless Steel Rotor—Thermoplastic Radial Bearing—Ceramic Trim—Stainless Steel Thrust Bearings—Tungsten Carbide Magnets—Ceramic
STRAINER MATERIALS	Body and Cover—Cast Iron Screen—Stainless Steel

SERIES "W" TURBO METERS

MODEL W-3500 DR
Bronze Magnetic Drive Flanged Ends Size 8" (DN 200mm)

Head Loss Curve (With AWWA Strainer)

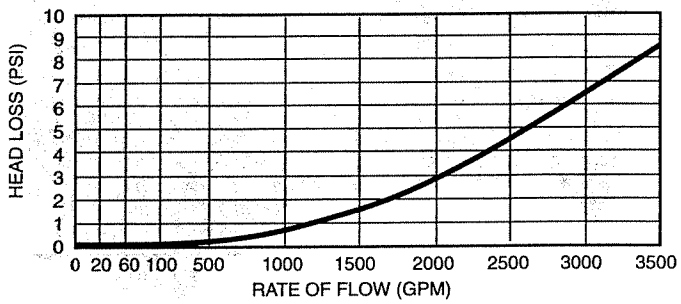

Accuracy Curve (With AWWA Strainer)

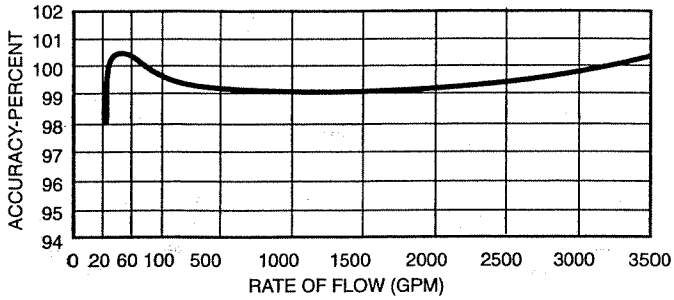

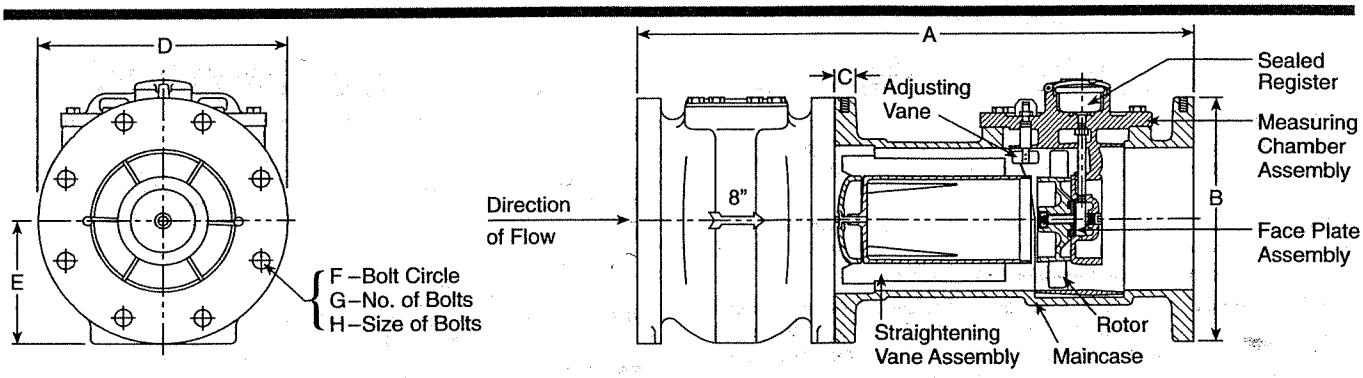

Meter and Pipe Size	Normal Operating Range GPM Minimum	Maximum	Connections	Dimensions A	B	C	D	E	F	G	H	Net Weight	Shipping Weight
8" DN 200mm	35 $8m^3/h$	3500① $795m^3/h$	Flanged	30-1/8"	15"	11/16"	13-1/2"	6-3/4	11-3/4"	8	3/4"	305 lbs.	340 lbs.
				765mm	381mm	17mm	343mm	172mm	300mm	8	19mm	138 kg	154 kg

① For continuous flows; 4400 GPM ($998m^3/h$) maximum for intermittent flows.

Remote Systems—For use with all sizes of Invensys Water Meters

All Invensys AMR systems work with the same absolute encoder Electronic Communications Registers (ECR), enabling the utility to mix and match or easily move from one system to another without changing registers for each.

The TouchRead® Automated Meter Reading and Billing System—is a multi-purpose encoder remote system suitable for indoor and/or outdoor use. The ECR Register uses a wired connection between the meter and an outside remote for inside set meters—or a pitlid mounted module, enabling underground meters to be read automatically without opening the meter box or vault. All wired connections and terminals of the TouchRead PitLid (TR/PL) modules and registers are fully sealed at the factory using a special process to ensure protection from water infiltration. The connection terminals of ECR/WP registers are also factory sealed.

Meters equipped for TouchRead System reading can be read with a visual reading device, stand alone AutoGun, and/or reading gun with an AutoRead Hand-Held Device. For more information on TouchRead System equipment refer to bulletins AMR-TR, AMR-401, AMR-403, AMR-312 and EXSUMHH.

PhonRead® AMR—is a reliable telephone based call-in system that does not require batteries for operation. It also does note require equipment to be installed at telephone company facilities. PhonRead Meter Interface Units (MIU) automatically call "in" to the utility office for transferring meter reading data from the meter site to a PC. PhonRead is a transparent AMR system that does not interfere with customers' telephone service. For more information refer to bulletins AMR-PR and AMR-302.

RadioRead® AMR—uses superior Direct Sequence Spread Spectrum modulation to provide reliable, safe and virtually interference free radio-based transmission of reading data from underground or inside-set meters that are equipped with Meter Transceiver Units (MXU). A choice of meter reading options is available. A radio frequency hand-held device (RF-HHD) can be used by a meter reader on foot. The RF-HHD can also be used to collect readings from TouchRead equipped meters, or for manual meter reading entries. A more powerful Vehicle Transceiver Unit (VXU) can be used in any car or truck to read meters while on the move. (A dedicated meter reading vehicle is not required.) For more information refer to bulletins AMR-RR, AMR-301 and AMR-303, and AMR-401.

MultiRead® Port Expanders—can provide the capability to connect multiple ECR equipped meters to a single PhonRead MIU or RadioRead MXU to save the utility time and money for installations such as apartment complexes and shopping centers. Refer to bulletin AMR-305, AMR-306 and AMR-308.

invensys
Metering Systems

Invensys Metering Systems
P.O. Box 487
450 N. Gallatin Avenue
Uniontown, PA 15401

1-800-METER-IT
1-800-638-3748

FAX (Direct to Factory)
Local: (724) 439-7729
Toll Free: 1-800-888-2403

Web site: www.ims.invensys.com
select *North American Water*
Email: h2oinfo@ims.invensys.com

AUTHORIZED INVENSYS DISTRIBUTOR

SERIES "W" TURBO METERS

Invensys
Metering Systems

MODEL W-5500 DR
Bronze Magnetic Drive Flanged Ends Size 10" (DN 250mm)

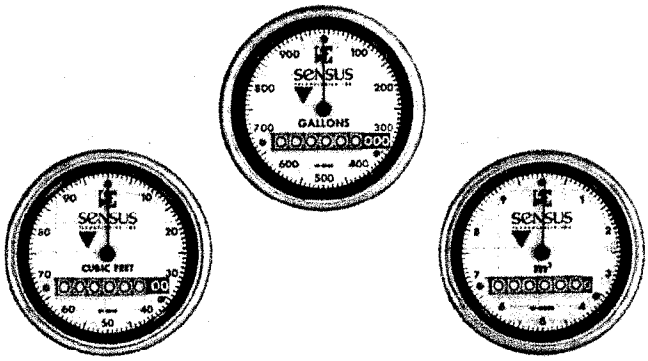

Direct Reading Registers

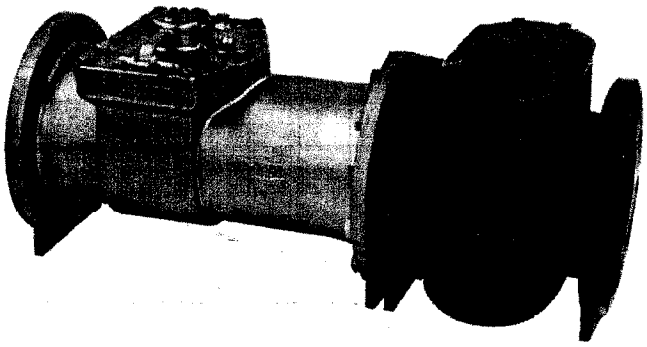

W-5500 DR Turbo Meter with AWWA Strainer

DESCRIPTION

MODEL: W-5500 DR Turbo Meter is based on the turbine principle of measurement; its operating range is from 55 to 5500 gallons per minute (12.5 to 1250 m3/h) with registration accuracy of 100% ±1.5% of actual thruput.

CONFORMANCE TO STANDARDS: Invensys Turbo Meters comply with ANSI/AWWA Standard C701 (most recent revision). Each meter is performance tested to insure compliance.

PERFORMANCE: The meter's unique principle of measurement assures extended accuracy life. The W-5500 DR has no restrictions as to sustained flow rates within its operating range. The design permits continuous operation up to its rated maximum flow capacity, without affecting long term accuracy or causing undue wear.

CONSTRUCTION: The meter consists of two basic assemblies—the maincase and the measuring chamber. Straightening vanes in the maincase minimize the swirl upstream of the meter so as to direct the flow evenly to the rotor. The measuring chamber assembly includes the rotor, adjusting vane (for calibration) and sealed Direct Reading (DR) register.

MAGNETIC DRIVE: The Right Angle Magnetic Drive eliminates conventional worm or miter gears normally required for horizontally mounted rotors or turbine measuring elements. Registration is accomplished by combining the magnetic actions of a driver magnet (embedded in the rear face of the rotor), a three-legged flux carrier and a cylindrical follower magnet attached to the gear train shaft inside the register's magnet well. Water flowing through the meter causes the rotor (with magnet) to turn; as one of the magnet poles passes one of the flux carrier legs, the magnetic force is transmitted through the flux carrier leg to the follower magnet, causing the register shaft to rotate. The only moving part in water is the rotor assembly.

ROTOR: The thermoplastic rotor with graphite bearing rotates on a chrome plated stainless steel shaft. The rotor assembly is virtually weightless in water, thus adding to bearing life.

MAINTENANCE: The measuring chamber and straightening vanes can be removed, repaired and/or replaced without disturbing the maincase in the line. A spare chamber can be utilized in the event maintenance is required. Cover plates are also available to keep the line in service while the measuring chamber is repaired and recalibrated. Factory testing, repair and measuring chamber exchange programs are available.

STRAINER: The meter comes equipped with an AWWA type strainer and must be installed immediately upstream of the meter. Invensys recommends the use of an approved strainer with this meter.

SPECIFICATIONS

SERVICE	Measurement of potable cold water with flow in one direction only.
OPERATING RANGE	Continuous Flows: 55 to 5500 gpm (12.5 to 1250 m^3/h) Intermittent Flows: 7000 gpm max. (1600 m^3/h)
ACCURACY	100% ± 1.5% of actual thruput
LOW FLOW	95% at 35 gpm (8 m^3/h)
PRESSURE LOSS	Meter and Strainer—6.2 psi at 5500 gpm (.4 bar at 1250 m^3/h)
MAXIMUM OPERATING PRESSURE	150 psi (10.0 bar)
FLANGE	10" U.S. ANSI B 16.1 Class 125. Optional drillings, if specified, British Standard B.S. 10 or metric standard ISO R2084
REGISTER	Hermetically Sealed Direct Reading Register with Low Flow Indicator.
METER REGISTRATION	1,000,000,000 gallons 1,000 gallons/sweep hand revolution 100,000,000 cubic feet 100 cubic feet/sweep hand revolution 10,000,000 m^3 10 m^3/sweep hand revolution
MATERIALS	Maincase—Bronze Measuring Chamber—Bronze Straightening Vanes—Stainless Steel Rotor—Thermoplastic Radial Bearing—Ceramic Trim—Stainless Steel Thrust Bearings—Tungsten Carbide Magnets—Ceramic
STRAINER MATERIALS	Body and Cover—Cast Iron Screen—Bronze

SERIES "W" TURBO METERS

MODEL W-5500 DR
Bronze Magnetic Drive Flanged Ends Size 10" (DN 250mm)

Head Loss Curve (With AWWA Strainer)

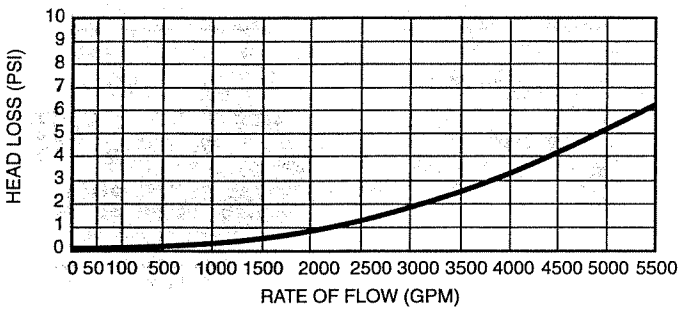

Accuracy Curve (With AWWA Strainer)

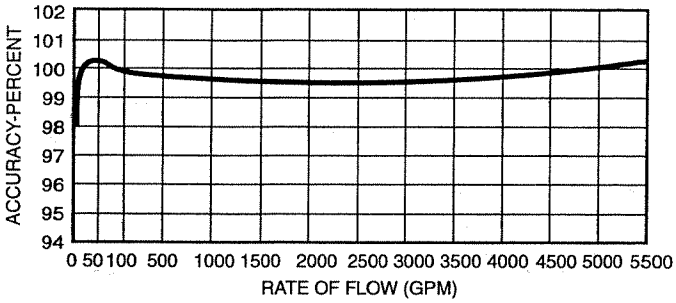

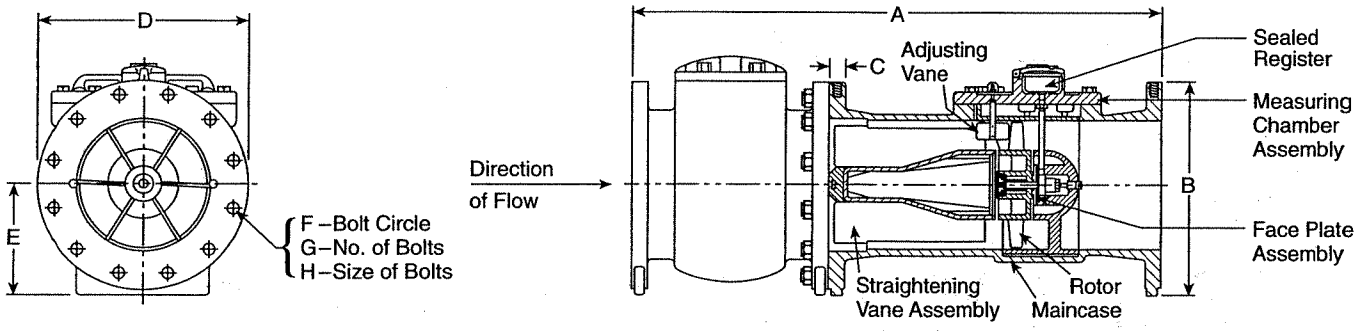

Meter and Pipe Size	Normal Operating Range GPM Minimum	Maximum	Dimensions									Net Weight	Shipping Weight
			Connections	A	B	C	D	E	F	G	H		
10" DN 250mm	55 12.5m³/h	5500① 1250m³/h	Flanged	41-1/8"	19"	11/16"	16"	8-1/2"	14-1/4"	12	7/8"	590 lbs.	650 lbs.
				1045mm	485mm	17mm	406mm	216mm	362mm	12	22mm	268 kg	294 kg

① For continuous flows; 7000 GPM (1600m³/h) maximum for intermittent flows.

Remote Systems—For use with all sizes of Invensys Water Meters

All Invensys AMR systems work with the same absolute encoder Electronic Communications Registers (ECR), enabling the utility to mix and match or easily move from one system to another without changing registers for each.

The TouchRead® Automated Meter Reading and Billing System—is a multi-purpose encoder remote system suitable for indoor and/or outdoor use. The ECR Register uses a wired connection between the meter and an outside remote for inside set meters—or a pitlid mounted module, enabling underground meters to be read automatically without opening the meter box or vault. All wired connections and terminals of the TouchRead PitLid (TR/PL) modules and registers are fully sealed at the factory using a special process to ensure protection from water infiltration. The connection terminals of ECR/WP registers are also factory sealed.

Meters equipped for TouchRead System reading can be read with a visual reading device, stand alone AutoGun, and/or reading gun with an AutoRead Hand-Held Device. For more information on TouchRead System equipment refer to bulletins AMR-TR, AMR-401, AMR-403, AMR-312 and EXSUMHH.

PhonRead® AMR—is a reliable telephone based call-in system that does not require batteries for operation. It also does note require equipment to be installed at telephone company facilities. PhonRead Meter Interface Units (MIU) automatically call "in" to the utility office for transferring meter reading data from the meter site to a PC. PhonRead is a transparent AMR system that does not interfere with customers' telephone service. For more information refer to bulletins AMR-PR and AMR-302.

RadioRead® AMR—uses superior Direct Sequence Spread Spectrum modulation to provide reliable, safe and virtually interference free radio-based transmission of reading data from underground or inside-set meters that are equipped with Meter Transceiver Units (MXU). A choice of meter reading options is available. A radio frequency hand-held device (RF-HHD) can be used by a meter reader on foot. The RF-HHD can also be used to collect readings from TouchRead equipped meters, or for manual meter reading entries. A more powerful Vehicle Transceiver Unit (VXU) can be used in any car or truck to read meters while on the move. (A dedicated meter reading vehicle is not required.) For more information refer to bulletins AMR-RR, AMR-301 and AMR-303, and AMR-401.

MultiRead® Port Expanders—can provide the capability to connect multiple ECR equipped meters to a single PhonRead MIU or RadioRead MXU to save the utility time and money for installations such as apartment complexes and shopping centers. Refer to bulletin AMR-305, AMR-306 and AMR-308.

invensys
Metering Systems

Invensys Metering Systems
P.O. Box 487
450 N. Gallatin Avenue
Uniontown, PA 15401

1-800-METER-IT
1-800-638-3748

FAX (Direct to Factory)
Local: (724) 439-7729
Toll Free: 1-800-888-2403

Web site: www.ims.invensys.com
select *North American Water*
Email: h2oinfo@ims.invensys.com

AUTHORIZED INVENSYS DISTRIBUTOR

4, 6, 8, 10-INCH FIRE SERVICE ASSEMBLIES

FIRELINE®

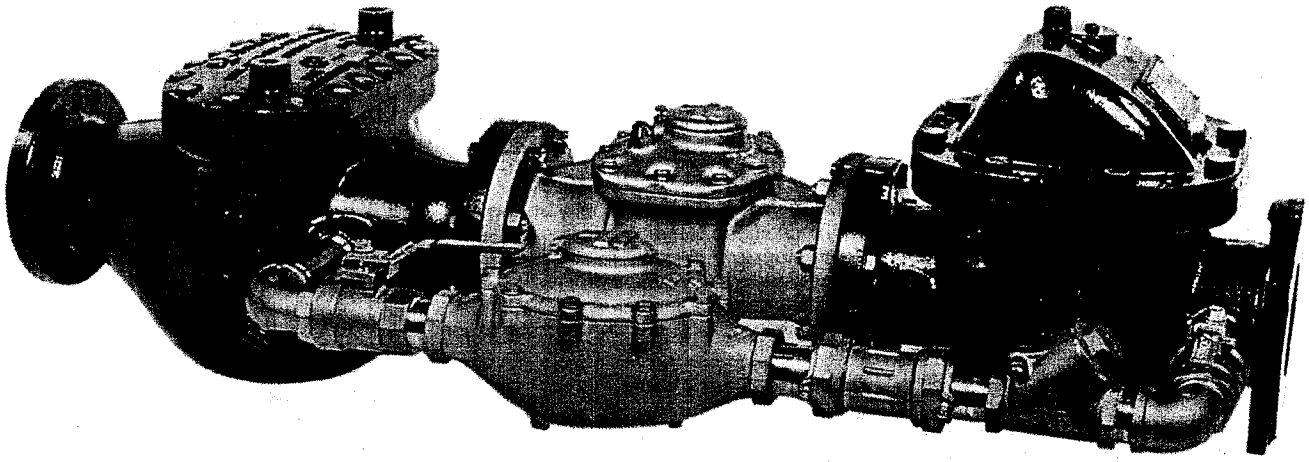

FIRELINE® FIRE SERVICE METER ASSEMBLIES

Sizes: 4"(DN 100mm)x 1-1/2"(DN 40mm)
6" (DN 150mm)x 2"(DN 50mm)
8" (DN 200mm)x 2"(DN 50mm)
10" (DN 250mm)x 2"(DN 50mm)

4, 6, 8, 10-INCH FIRE SERVICE ASSEMBLIES

FIRELINE FIRE SERVICE WATER METER ASSEMBLIES

Invensys FireLine® Meter Assemblies save time and reduce installation costs by eliminating the need for a secondary service line in industrial, multi-residential and commercial applications. They can also be used in various manufacturing or processing applications where frequent high-capacity water flows are encountered.

FireLine Meter Assemblies with SR or Turbo Meters on the by-pass are UL approved. All FireLine Meter Assemblies comply with ANSI/AWWA Standard C703 (most recent revision) and are individually performance tested to insure compliance.

Each FireLine assembly includes a 4", 6", 8" or 10" size Invensys "W" Series Turbo Meter and strainer to measure high volume water flows, and a SR or Turbo Meter to measure water flows within normal usage ranges. Whenever instantaneous high volume flow is required, such as when a building's automatic fire sprinkler or deluge system is activated, the FireLine Meter Assembly automatically switches to its higher volume flow path. The high volume flows are measured by both meters as the water passes through the assembly.

FireLine Meter Assemblies include all valves, meters, strainers and by-pass piping required. Each assembly is shipped completely assembled, ready to install. Optional electronic communication registers (ECR) for above-ground on-site or remote meter reading are available.

❶ High Capacity Turbo Meter

FireLine Meter Assemblies include a 4", 6", 8" or 10" "W" Series bronze Turbo Meter, proven in years of dependable service. Each is accuracy and pressure tested at the factory eliminating the need for adjustments in the field.

"W" Series Turbo Meters consist of two basic components; the maincase and a removable measuring chamber. Straightening vanes in the maincase minimize water "swirl" upstream of the meter, helping direct the flow evenly to the rotor.

"W" Series Turbo Meters feature a patented right angle magnetic drive. The only moving part exposed to water is the rotor assembly.

❷ Strainer

The strainer screen is made of stainless steel and is designed to prevent debris or objects from entering to clog the line or damage the Turbo Meter's rotor. Strainer bodies are made of ductile iron and lids are removable to provide access to the screen for cleaning or service.

❸ Detector Check Valve

A gravity induced bronze clapper in the detector check valve directs any normal flow in the system through the by-pass meter. When full flow capacity is required, the clapper opens fully allowing unobstructed water flow.

❹ SR Displacement Type Meter or Series "W" Turbo Meter

The 4" x 1-1/2" and 6" x 2" FireLine Meter Assemblies include Invensys Sealed Register displacement type meters. These magnetic drive meters comply with ANSI/AWWA Standard C700-90. Each meter is tested to insure compliance and provide years of trouble-free service.

The 8" x 2" and 10" x 2" FireLine Meter Assemblies use Invensys Series "W" Turbo Meters which provide an operating range of from 4 to 160 gallons per minute (0.9 to 36m^3/h) with accuracy registration of 100% ± 1.5% of actual throughput. These meters feature a patented right angle magnetic drive which eliminates conventional worm or miter gears normally required for horizontally mounted rotors or turbine measuring elements. Each meter is factory tested to ensure years of trouble-free service.

❺ Check Valves

The valve is used to check or impede backflow in the line. Line pressure forces an internal disc to open, allowing water flow in the direction desired. When pressure drops, gravity and line backpressure close the disc, impeding backflow.

❻ Ball Valves

Each FireLine Meter Assembly includes two lockable ball valves; one upstream and one downstream of the normal service meter. Optional bronze gate valves are also available.

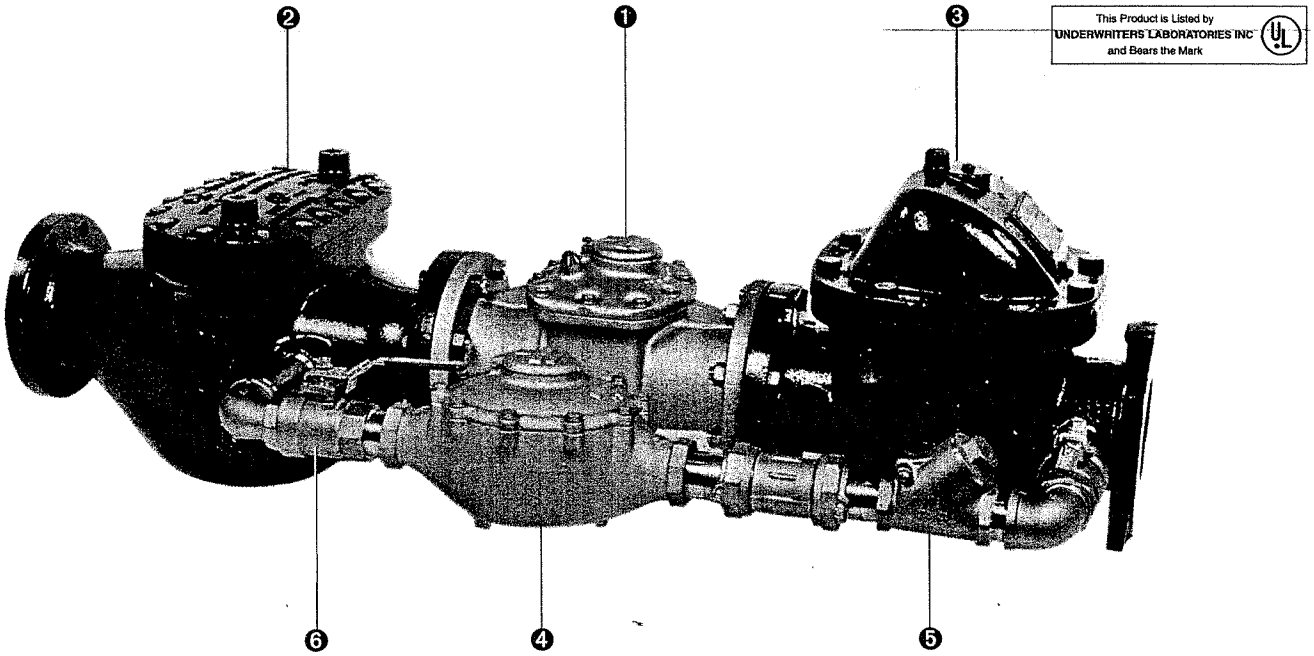

This Product is Listed by UNDERWRITERS LABORATORIES INC and Bears the Mark

4, 6, 8, 10-INCH FIRE SERVICE ASSEMBLIES

SPECIFICATIONS, MATERIALS AND DIMENSIONS

All Turbo Meters used in FireLine Meter Assemblies utilize hermetically sealed, direct read registers which are available in readouts of gallons, cubic feet, or metric units, as specified. Electronic and remote reading registers are available. Consult your Sales Representative for more details.

LIST OF MATERIALS – 4"

No.	Name	Quantity	Material
1	Invensys 4" Turbo Meter	1	Bronze
2	Strainer	1	Ductile Iron
3	Mueller Detector Check Valve	1	Cast Iron
4	Invensys 1-1/2" SR Meter	1	Bronze
5	Check Valve	1	Bronze
6	Ball Valve — Locking①	2	Bronze
7	Upstream Bolts Supplied as Standard Equipment	8	Type 316 Stainless Steel
	4" Smith-Blair Flanged Coupling Adapter (Optional-Not Shown)②	1	Cast Iron

DIMENSIONS – 4"

A	Overall Length	51.88"
B	Overall Height	17.00"
C	Center Line to Meter Base	4.75"
D	Center Line to Strainer Base	5.78"
E	Overall Width	23.00"
F	Center Line to Center Line	11.56"
G	Center Line to By-Pass Extreme	16.13"
	Flanged Coupling Adapter Length	4.56"
	By-Pass Size (nom.)	1.50"
	Weight (Lbs)	470

FLOW RANGES AND ACCURACY LIMITS – 4"

4"	Continuous Flows: 5 to 1000 GPM
	Intermittent Flows: 1250 GPM
	Low Flows: 1.5 GPM
	Accuracy③: ±1.5% of Actual Throughput–95% at Low Flow

4"

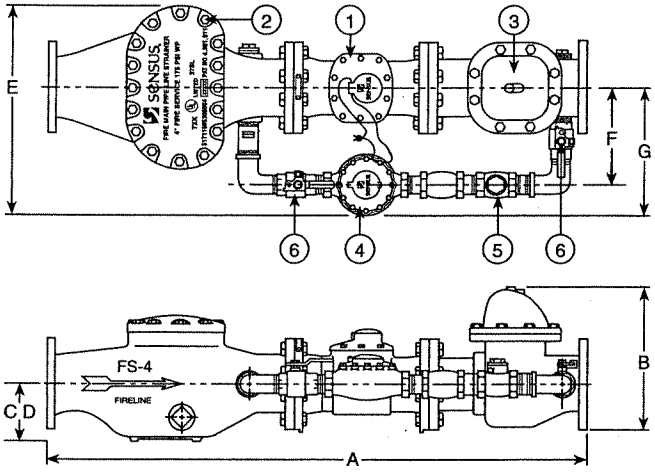

LIST OF MATERIALS – 6"

No.	Name	Quantity	Material
1	Invensys 6" Turbo Meter	1	Bronze
2	Strainer	1	Ductile Iron
3	Mueller Detector Check Valve	1	Cast Iron
4	Invensys 2" SR Meter	1	Bronze
5	Check Valve	1	Bronze
6	Ball Valve — Locking①	2	Bronze
7	Upstream Bolts Supplied as Standard Equipment	8	Type 316 Stainless Steel
	6" Smith-Blair Special 913 Flanged Coupling Adapter (Optional-Not Shown)②	1	Fabricated Steel

DIMENSIONS – 6"

A	Overall Length	67.63"
B	Overall Height	20.63"
C	Center Line to Meter Base	5.75"
D	Center Line to Strainer Base	5.75"
E	Overall Width	27.63"
F	Center Line to Center Line	11.84"
G	Center Line to By-Pass Extreme	17.12"
	Flanged Coupling Adapter Length	5.00"
	By-Pass Size (nom.)	2.00"
	Weight (Lbs)	775

FLOW RANGES AND ACCURACY LIMITS – 6"

	Continuous Flows: 8 to 2000 GPM
	Intermittent Flows: 2500 GPM
	Low Flows: 2 GPM
	Accuracy③: ±1.5% of Actual Throughput–95% at Low Flow

6"

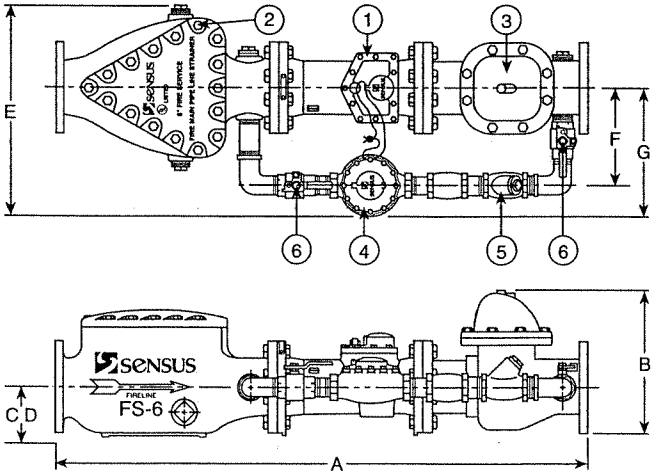

① Bronze gate valve optional
② Pipeline OD required
③ Except at crossover

4, 6, 8, 10-INCH FIRE SERVICE ASSEMBLIES

SPECIFICATIONS, MATERIALS AND DIMENSIONS

All Turbo Meters used in FireLine Meter Assemblies utilize hermetically sealed, direct read registers which are available in readouts of gallons, cubic feet, or metric units, as specified. Electronic and remote reading registers are available. Consult your Sales Representative for more details.

8"

LIST OF MATERIALS – 8"

No.	Name	Quantity	Material
1	Invensys 8" Turbo Meter	1	Bronze
2	Strainer	1	Ductile Iron
3	Mueller Detector Check Valve	1	Cast Iron
4	Invensys 2" Turbo Meter	1	Bronze
5	Check Valve	1	Bronze
6	Ball Valve — Locking①	2	Bronze
7	Upstream Bolts Supplied as Standard Equipment	8	Type 316 Stainless Steel
	8" Smith-Blair Special 913 Flanged Coupling Adapter (Optional-Not Shown)②	1	Fabricated Steel

DIMENSIONS – 8"

A	Overall Length	77.00"
B	Overall Height	24.00"
C	Center Line to Meter Base	6.75"
D	Center Line to Strainer Base	0.00"
E	Overall Width	29.50"
F	Center Line to Center Line	10.91"
G	Center Line to By-Pass Extreme	13.75"
	Flanged Coupling Adapter Length	5.13"
	By-Pass Size (nom.)	2.00"
	Weight (Lbs)	1029

FLOW RANGES AND ACCURACY LIMITS – 8"

	Continuous Flows: 4 to 3500 GPM
	Intermittent Flows: 4400 GPM
	Low Flows: 3 GPM
	Accuracy③: ±1.5% of Actual Throughput–95% at Low Flow

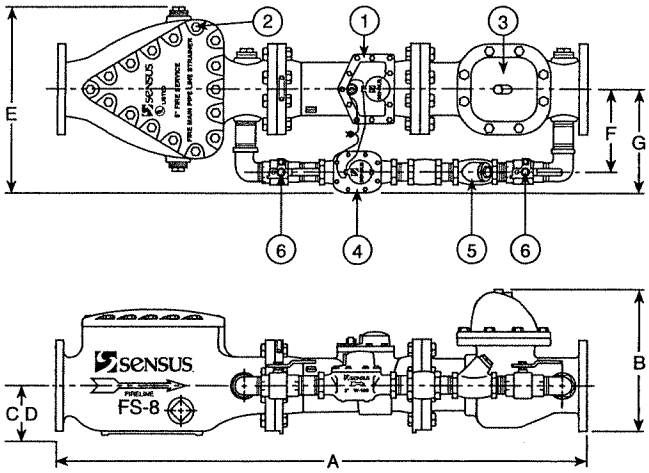

10"

LIST OF MATERIALS – 10"

No.	Name	Quantity	Material
1	Invensys 10" Turbo Meter	1	Bronze
2	Strainer	1	Ductile Iron
3	Mueller Detector Check Valve	1	Cast Iron
4	Invensys 2" Turbo Meter	1	Bronze
5	Check Valve	1	Bronze
6	Ball Valve — Locking①	2	Bronze
7	Upstream Bolts Supplied as Standard Equipment	8	Type 316 Stainless Steel
	10" Smith-Blair Special 913 Flanged Coupling Adapter (Optional-Not Shown)②	1	Fabricated Steel

DIMENSIONS – 10"

A	Overall Length	90.00"
B	Overall Height	33.00"
C	Center Line to Meter Base	8.50"
D	Center Line to Strainer Base	8.50"
E	Overall Width	32.75"
F	Center Line to Center Line	11.25"
G	Center Line to By-Pass Extreme	17.00"
	Flanged Coupling Adapter Length	5.56"
	By-Pass Size (nom.)	2.00"
	Weight (Lbs)	1562

FLOW RANGES AND ACCURACY LIMITS – 10"

	Continuous Flows: 4 to 5500 GPM
	Intermittent Flows: 7000 GPM
	Low Flows: 3 GPM
	Accuracy③: ±1.5% of Actual Throughput–95% at Low Flow

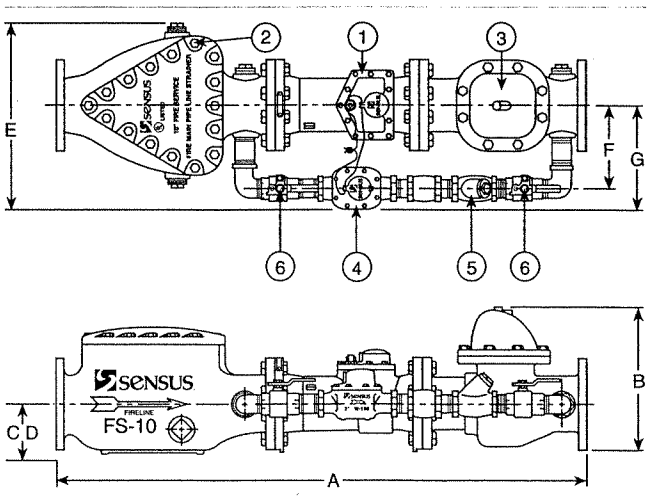

① Bronze gate valve optional
② Pipeline OD required
③ Except at crossover

FireLine Meter Assemblies – Accuracy and Head Loss Curves

4"

Accuracy and Head Loss Curves

4" FireLine Assembly with 1-1/2" Bronze By-Pass and 1-1/2" SR Meter

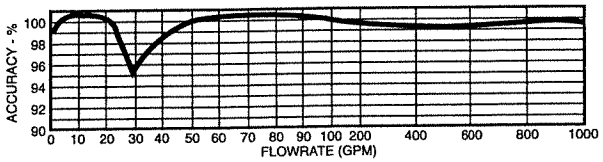

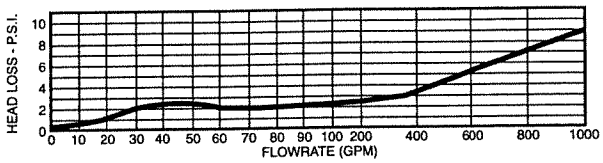

6"

Accuracy and Head Loss Curves

6" FireLine Assembly with 2" Bronze By-Pass and

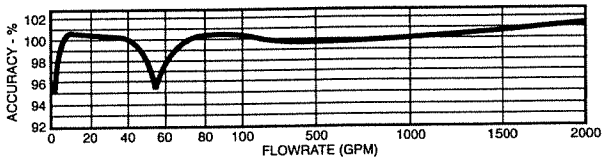

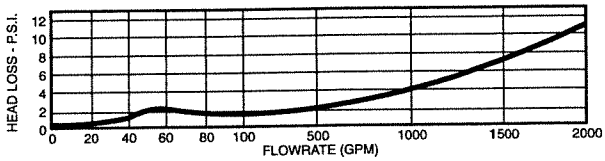

8"

Accuracy and Head Loss Curves

8" FireLine Assembly with 2" Bronze By-Pass and 2" W-160 Turbo Meter

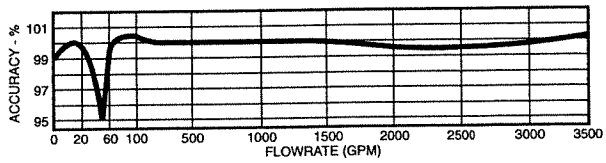

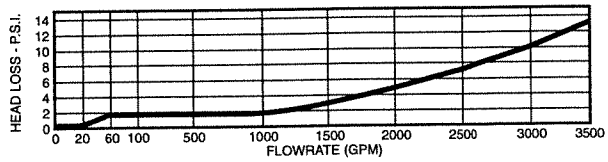

10"

Accuracy and Head Loss Curves

10" FireLine Assembly with 2" Bronze By-Pass and 2" W-160 Turbo Meter

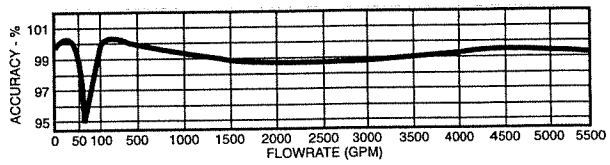

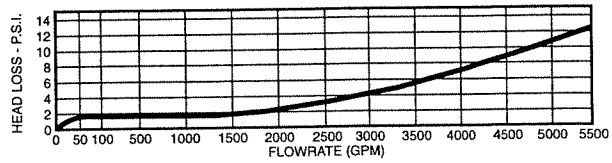

TouchRead® System

The fast, accurate, safe and efficient way to read underground vault-set water meters

TouchRead System registers and lid-mounted modules can be optionally added to your Invensys fire service or other underground meters to provide a faster, more efficient way to obtain readings from vault-set meters. The TouchRead System provides a realistic payback by eliminating many of the problems associated with reading underground meters—such as pumping out flooded vaults or sending two-person crews to comply with confined space safety regulations.

TouchRead equipped vault-set meters are read by touching the tip of a PitProbe reading gun to an electronic module mounted in the vault lid and depressing a button on the gun's handle. In about two seconds, each meter's reading data is electronically transferred to a hand held visual reader or Hand-held device carried by the meter reader.

For more information, contact your Invensys representative or authorized distributor.

Dual Range Accuracy From A Single Service Line

FireLine Meter Assemblies provide a dual range water flow path. During normal flow range usage, the flow travels through only the smaller (1-1/2" or 2") line and is accurately measured by the SR or Turbo Meter.

For sudden high capacity flow requirements—such as when a building's automatic fire sprinkler or deluge system is activated, the assembly's detector check valve responds to the demand and automatically opens the flow path to include the large line. At high flow, both meters will be measuring and supplying water. No outside electronic switching devices are required.

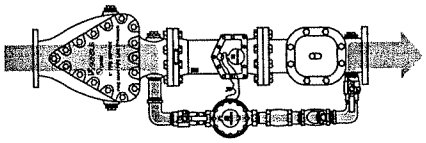

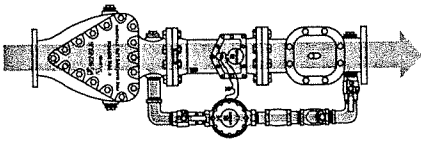

Invensys Metering Systems

Invensys Metering Systems
P.O. Box 487
450 N. Gallatin Avenue
Uniontown, PA 15401

1-800-METER-IT
1-800-638-3748

FAX (Direct to Factory)
Local: (724) 439-7729
Toll Free: 1-800-888-2403

Web site: www.ims.invensys.com
select *North American Water*
Email: h2oinfo@ims.invensys.com

COMPOUND METERS

invensys
Metering Systems

SINGLE REGISTER HIGH-PERFORMANCE COMPOUND METER
Size 3" (DN 80mm)

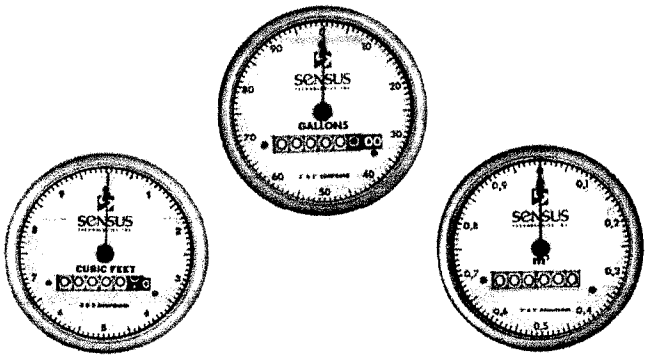

Direct Reading Registers

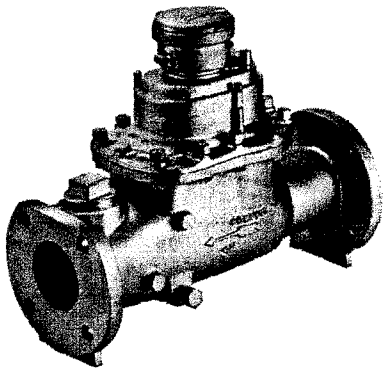

3" SRH Compound Meter

DESCRIPTION

APPLICATION: The 3" SRH Compound Meter is designed specifically for use in cold water services where flows vary from the very large to the very small. Typical applications are apartment dwellings, office buildings, hotels, schools and smaller manufacturing facilities.

CONFORMANCE TO STANDARDS: SRH Compound Meters comply with ANSI/AWWA Standard C702 (most recent revision). Each meter is performance tested to insure compliance.

CONSTRUCTION: The SRH Compound Meter is essentially two meters within a single bronze housing. Low flows are measured through the piston type positive displacement measuring chamber. High flows through the turbine chamber. Flows through the measuring chambers are controlled by a bronze swing action valve. The measurements of the two chambers are coordinated and recorded on a single billing register.

COORDINATOR: A separate, sealed compartment contains the reduction gearing and over-riding clutches for both chambers in one module. The compartment is oil-filled for long life and maintenance-free operation. Separate change gears for calibrating the measuring chambers are located on top of the module for easy access.

MAGNETIC DRIVE COUPLINGS: The motion of the measuring chambers is transferred to the sealed coordinator and single totalizing register through magnetic couplings. This allows all reduction gearing to be out of the water. Also, the turbine's shaft is magnetically suspended, causing it to be essentially weightless in water.

MODULAR DESIGN: The hermetically sealed register, coordinator module, positive displacement chamber and turbine chamber can all be replaced quickly and easily with the meter in line.

MAINTENANCE: SRH Compound Meters should be tested periodically to insure proper operation. A test plug is conveniently located on top of the maincase for field testing. Factory testing, repair and meter exchange programs are available.

SPECIFICATIONS

SERVICE	Measurement of cold water up to 80°F (27°C) with flow in one direction only.
OPERATING RANGE	1/2 to 320 gpm (.11 to 72.6 m^3/h)
ACCURACY (except at crossover)	100% ± 1.5% of actual thruput
ACCURACY AT CROSSOVER	95% minimum
LOW FLOW	95% minimum at 1/2 gpm (.11 m^3/h)
2PRESSURE LOSS	4.2 psi at 320 gpm (.29 bar at 73 m^3/h)
MAXIMUM OPERATING PRESSURE	150 psi (10.34 bar)
FLANGE	3" Round, ANSI Class 125
REGISTER	Hermetically Sealed Direct Reading Register with Low Flow Indicator
METER REGISTRATION	100,000,000 gallons 100 gallons/sweep hand revolution 10,000,000 cubic feet 10 cubic feet/sweep hand revolution 1,000,000 m^3 1.0 m^3/sweep hand revolution
MATERIALS	Maincase—Bronze Bypass Chamber—Rocksyn® (Bronze optional) Turbine Chamber—Synthetic Polymer (Bronze optional) Piston—Synthetic Polymer Turbine—Polypropylene Valve—Bronze Test Plug—2" Tapered Pipe Threads (test nipple and valve optional) Trim—Stainless Steel

SINGLE REGISTER HIGH-PERFORMANCE COMPOUND METER
Size 3" (DN 80mm)

Head Loss Curve

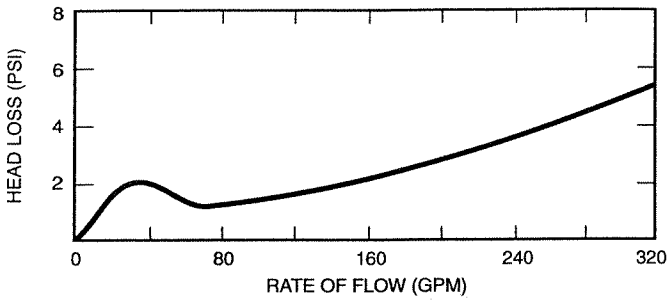

Accuracy Curve

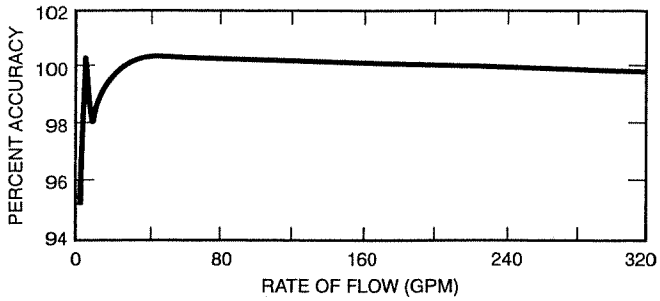

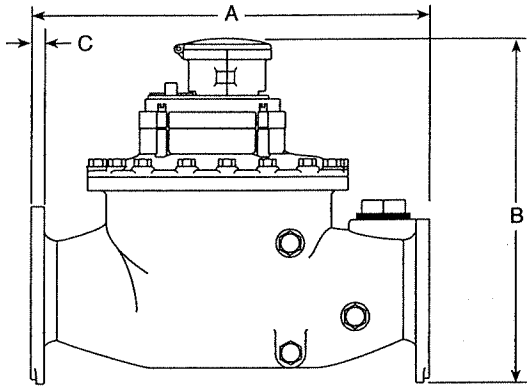

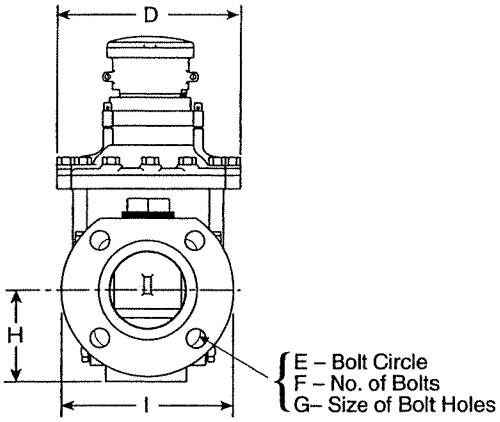

Meter and Pipe Size	Dimensions									Net Weight	Shipping Weight
	A	B	C	D	E	F	G	H	I		
3"	17"	15-5/16"	3/4"	8-1/8"	6"	4	3/4"	4"	7-1/2"	70 lbs.	75 lbs.
DN 80mm	432mm	389mm	19mm	206mm	153mm	4	19mm	102mm	191mm	32 kg	34 kg

Remote Reading Systems—For use with all sizes of Invensys Water Meters

All Invensys AMR systems work with the same absolute encoder Electronic Communications Registers (ECR), enabling the utility to mix and match or easily move from one system to another without changing registers for each.

The TouchRead® Automated Meter Reading and Billing System—is a multipurpose encoder remote system suitable for indoor and/or outdoor use. The ECR Register uses a wired connection between the meter and an outside remote for inside set meters—or a pitlid mounted module, enabling underground meters to be read automatically without opening the meter box or vault. All wired connections and terminals of the TouchRead PitLid (TR/PL) modules and registers are fully sealed at the factory using a special process to ensure protection from water infiltration. The connection terminals of ECR/WP registers are also factory sealed.

Meters equipped for TouchRead System reading can be read with a visual reading device, stand alone AutoGun, and/or reading gun with an AutoRead Hand-Held Device. For more information on TouchRead System equipment refer to bulletins AMR-TR, AMR-401, AMR-403, AMR-312 and EXSUMHH.

PhonRead® AMR—is a reliable telephone based call-in system that does not require batteries for operation. It also does note require equipment to be installed at telephone company facilities. PhonRead Meter Interface Units (MIU) automatically call "in" to the utility office for transferring meter reading data from the meter site to a PC. PhonRead is a transparent AMR system that does not interfere with customers' telephone service. For more information refer to bulletins AMR-PR and AMR-302.

RadioRead® AMR—uses superior Direct Sequence Spread Spectrum modulation to provide reliable, safe and virtually interference free radio-based transmission of reading data from underground or inside-set meters that are equipped with Meter Transceiver Units (MXU). A choice of meter reading options is available. A radio frequency hand-held device (RF-HHD) can be used by a meter reader on foot. The RF-HHD can also be used to collect readings from TouchRead equipped meters, or for manual meter reading entries. A more powerful Vehicle Transceiver Unit (VXU) can be used in any car or truck to read meters while on the move. (A dedicated meter reading vehicle is not required.) For more information refer to bulletins AMR-RR, AMR-301 and AMR-303, and AMR-401.

MultiRead® Port Expanders—can provide the capability to connect multiple ECR equipped meters to a single PhonRead MIU or RadioRead MXU to save the utility time and money for installations such as apartment complexes and shopping centers. Refer to bulletin AMR-305, AMR-306 and AMR-308.

Invensys
Metering Systems

Invensys Metering Systems
P.O. Box 487
450 N. Gallatin Avenue
Uniontown, PA 15401

1-800-METER-IT
1-800-638-3748

FAX (Direct to Factory)
Local: (724) 439-7729
Toll Free: 1-800-888-2403

Web site: www.ims.invensys.com
select *North American Water*
Email: h2oinfo@ims.invensys.com

AUTHORIZED INVENSYS DISTRIBUTOR

COMPOUND METERS

invensys
Metering Systems

SINGLE REGISTER HIGH-PERFORMANCE COMPOUND METER
Size 4" (DN 100mm)

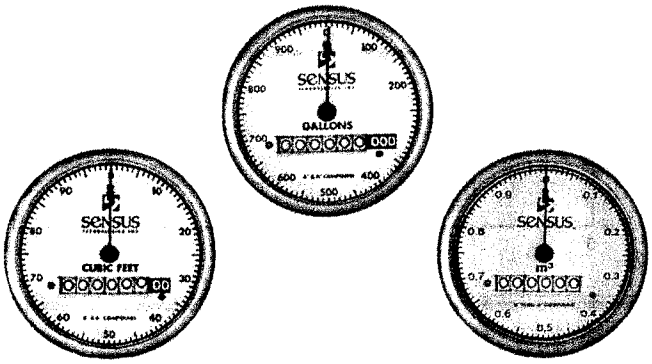

Direct Reading Registers

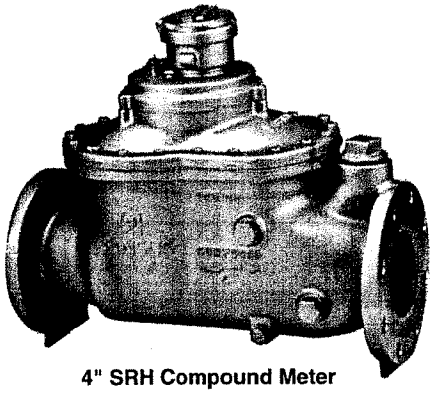

4" SRH Compound Meter

DESCRIPTION

APPLICATION: The 4" SRH Compound Meter is designed specifically for use in cold water services where flows vary from the very large to the very small. Typical applications are apartment dwellings, office buildings, hotels, schools and smaller manufacturing facilities.

CONFORMANCE TO STANDARDS: SRH Compound Meters comply with ANSI/AWWA Standard C702 (most recent revision). Each meter is performance tested to insure compliance.

CONSTRUCTION: The SRH Compound Meter is essentially two meters within a single bronze housing. Low flows are measured through the piston type positive displacement measuring chamber. High flows through the turbine chamber. Flows through the measuring chambers are controlled by a bronze swing action valve. The measurements of the two chambers are coordinated and recorded on a single billing register.

COORDINATOR: A separate, sealed compartment contains the reduction gearing and over-riding clutches for both chambers in one module. The compartment is oil-filled for long life and maintenance-free operation. Separate change gears for calibrating the measuring chambers are located on top of the module for easy access.

MAGNETIC DRIVE COUPLINGS: The motion of the measuring chambers is transferred to the sealed coordinator and single totalizing register through magnetic couplings. This allows all reduction gearing to be out of the water. Also, the turbine's shaft is magnetically suspended, causing it to be essentially weightless in water.

MODULAR DESIGN: The hermetically sealed register, coordinator module, positive displacement chamber and turbine chamber can all be replaced quickly and easily with the meter in line.

MAINTENANCE: SRH Compound Meters should be tested periodically to insure proper operation. A test plug is conveniently located on top of the maincase for field testing. Factory testing, repair and meter exchange programs are available.

SPECIFICATIONS

SERVICE	Measurement of cold water up to 80°F (27°C) with flow in one direction only.
OPERATING RANGE	3/4 to 500 gpm (.15 to 114 m^3/h)
ACCURACY (except at crossover)	100% ± 1.5% of actual thruput
ACCURACY AT CROSSOVER	95% minimum
LOW FLOW	95% minimum at 3/4 gpm (.15 m^3/h)
PRESSURE LOSS	3.1 psi at 500 gpm (.21 bar at 114 m^3/h)
MAXIMUM OPERATING PRESSURE	150 psi (10.34 bar)
FLANGE	4" Round, ANSI Class 125
REGISTER	Hermetically Sealed Direct Reading Register with Low Flow Indicator
METER REGISTRATION	1,000,000,000 gallons 1,000 gallons/sweep hand revolution 100,000,000 cubic feet 100 cubic feet/sweep hand revolution 1,000,000 m^3 1.0 m^3/sweep hand revolution
MATERIALS	Maincase—Bronze Bypass Chamber—Rocksyn® (Bronze optional) Turbine Chamber—Synthetic Polymer (Bronze optional) Piston—Synthetic Polymer Turbine—Polypropylene Valve—Bronze Test Plug—2" Tapered Pipe Threads (test nipple and valve optional) Trim—Stainless Steel

SINGLE REGISTER HIGH-PERFORMANCE COMPOUND METER
Size 4" (DN 100mm)

Head Loss Curve

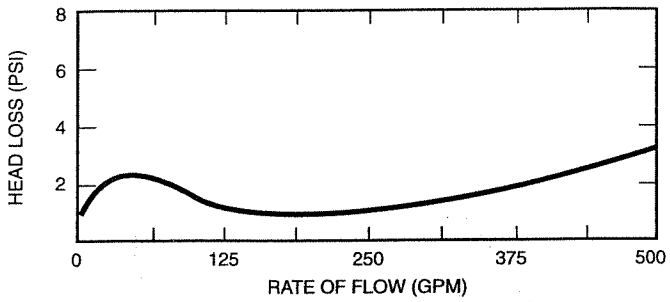

Accuracy Curve

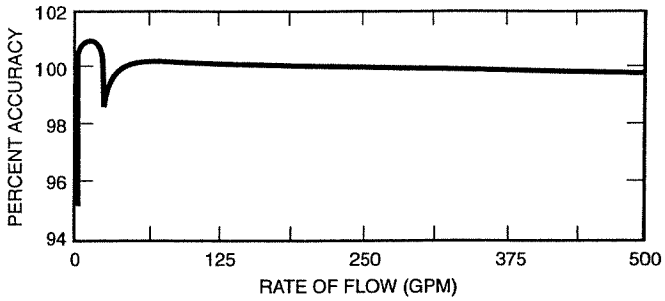

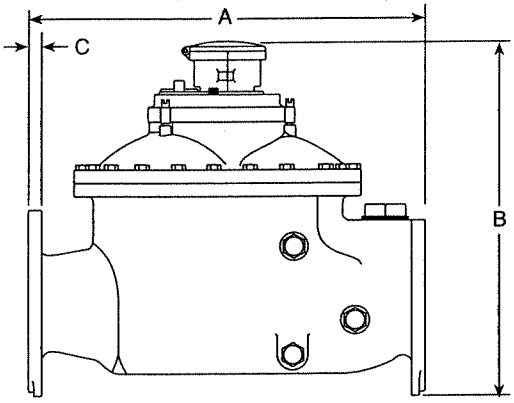

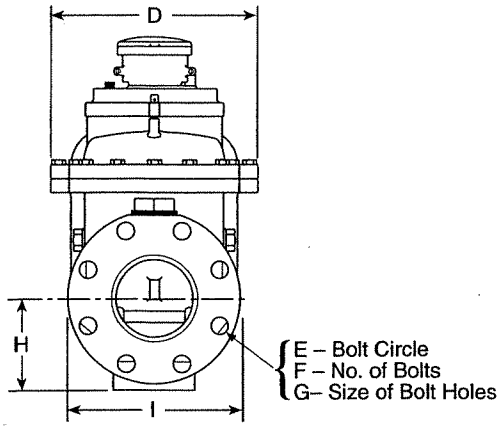

Meter and Pipe Size	Dimensions									Net Weight	Shipping Weight
	A	B	C	D	E	F	G	H	I		
4"	20"	17-3/4"	11/16"	10-5/8"	7-1/2"	8	3/4"	4-3/4"	9"	128 lbs.	133 lbs.
DN 100mm	508mm	451mm	17mm	270mm	190mm	8	19mm	121mm	229mm	58 kg	60.3 kg

Remote Reading Systems—For use with all sizes of Invensys Water Meters

All Invensys AMR systems work with the same absolute encoder Electronic Communications Registers (ECR), enabling the utility to mix and match or easily move from one system to another without changing registers for each.

The TouchRead® Automated Meter Reading and Billing System—is a multi-purpose encoder remote system suitable for indoor and/or outdoor use. The ECR Register uses a wired connection between the meter and an outside remote for inside set meters—or a pitlid mounted module, enabling underground meters to be read automatically without opening the meter box or vault. All wired connections and terminals of the TouchRead PitLid (TR/PL) modules and registers are fully sealed at the factory using a special process to ensure protection from water infiltration. The connection terminals of ECR/WP registers are also factory sealed.

Meters equipped for TouchRead System reading can be read with a visual reading device, stand alone AutoGun, and/or reading gun with an AutoRead Hand-Held Device. For more information on TouchRead System equipment refer to bulletins AMR-TR, AMR-401, AMR-403, AMR-312 and EXSUMHH.

PhonRead® AMR—is a reliable telephone based call-in system that does not require batteries for operation. It also does note require equipment to be installed at telephone company facilities. PhonRead Meter Interface Units (MIU) automatically call "in" to the utility office for transferring meter reading data from the meter site to a PC. PhonRead is a transparent AMR system that does not interfere with customers' telephone service. For more information refer to bulletins AMR-PR and AMR-302.

RadioRead® AMR—uses superior Direct Sequence Spread Spectrum modulation to provide reliable, safe and virtually interference free radio-based transmission of reading data from underground or inside-set meters that are equipped with Meter Transceiver Units (MXU). A choice of meter reading options is available. A radio frequency hand-held device (RF-HHD) can be used by a meter reader on foot. The RF-HHD can also be used to collect readings from TouchRead equipped meters, or for manual meter reading entries. A more powerful Vehicle Transceiver Unit (VXU) can be used in any car or truck to read meters while on the move. (A dedicated meter reading vehicle is not required.) For more information refer to bulletins AMR-RR, AMR-301 and AMR-303, and AMR-401.

MultiRead® Port Expanders—can provide the capability to connect multiple ECR equipped meters to a single PhonRead MIU or RadioRead MXU to save the utility time and money for installations such as apartment complexes and shopping centers. Refer to bulletin AMR-305, AMR-306 and AMR-308.

invensys
Metering Systems

Invensys Metering Systems
P.O. Box 487
450 N. Gallatin Avenue
Uniontown, PA 15401

1-800-METER-IT
1-800-638-3748

FAX (Direct to Factory)
Local: (724) 439-7729
Toll Free: 1-800-888-2403

Web site: www.ims.invensys.com
select *North American Water*
Email: h2oinfo@ims.invensys.com

AUTHORIZED INVENSYS DISTRIBUTOR

COMPOUND METERS

invensys
Metering Systems

SINGLE REGISTER HIGH-PERFORMANCE COMPOUND METER
Size 6" (DN 150mm)

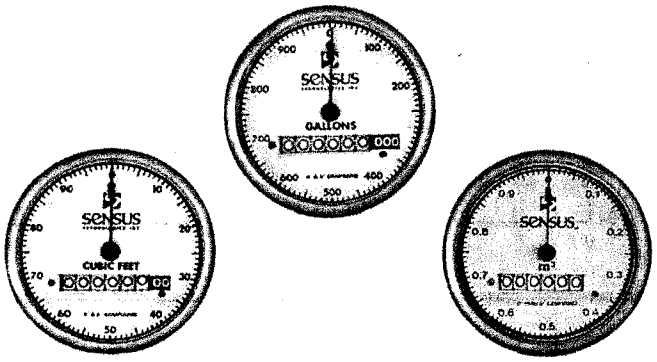

Direct Reading Registers

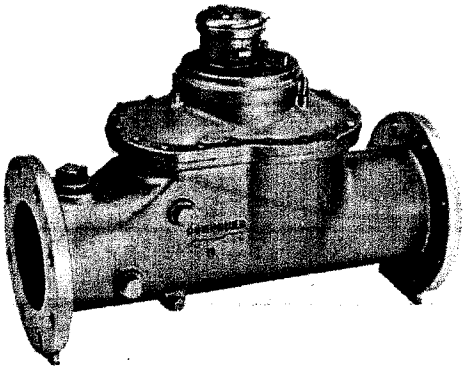

6" SRH Compound Meter

DESCRIPTION

APPLICATION: The 6" SRH Compound Meter is designed specifically for use in cold water services where flows vary from the very large to the very small. Typical applications are apartment dwellings, office buildings, hotels, schools and smaller manufacturing facilities.

CONFORMANCE TO STANDARDS: SRH Compound Meters comply with ANSI/AWWA Standard C702 (most recent revision). Each meter is performance tested to insure compliance.

CONSTRUCTION: The SRH Compound Meter is essentially two meters within a single bronze housing. Low flows are measured through the piston type positive displacement measuring chamber. High flows through the turbine chamber. Flows through the measuring chambers are controlled by a bronze swing action valve. The measurements of the two chambers are coordinated and recorded on a single billing register.

COORDINATOR: A separate, sealed compartment contains the reduction gearing and over-riding clutches for both chambers in one module. The compartment is oil-filled for long life and maintenance-free operation. Separate change gears for calibrating the measuring chambers are located on top of the module for easy access.

MAGNETIC DRIVE COUPLINGS: The motion of the measuring chambers is transferred to the sealed coordinator and single totalizing register through magnetic couplings. This allows all reduction gearing to be out of the water. Also, the turbine's shaft is magnetically suspended, causing it to be essentially weightless in water.

MODULAR DESIGN: The hermetically sealed register, coordinator module, positive displacement chamber and turbine chamber can all be replaced quickly and easily with the meter in line.

MAINTENANCE: SRH Compound Meters should be tested periodically to insure proper operation. A test plug is conveniently located on top of the maincase for field testing. Factory testing, repair and meter exchange programs are available.

SPECIFICATIONS

SERVICE	Measurement of cold water up to 80°F (27°C) with flow in one direction only.
OPERATING RANGE	1-1/2 to 1000 gpm (.35 to 225 m^3/h)
ACCURACY (except at crossover)	100% ± 1.5% of actual thruput
ACCURACY AT CROSSOVER	95% minimum
LOW FLOW	95% minimum at 1-1/2 gpm (.35 m^3/h)
PRESSURE LOSS	13.9 psi at 1000 gpm (.96 bar at 225 m^3/h)
MAXIMUM OPERATING PRESSURE	150 psi (10.34 bar)
FLANGE	6" Round, ANSI Class 125
REGISTER	Hermetically Sealed Direct Reading Register with Low Flow Indicator
METER REGISTRATION	1,000,000,000 gallons 1,000 gallons/sweep hand revolution 100,000,000 cubic feet 100 cubic feet/sweep hand revolution 1,000,000 m^3 1.0 m^3/sweep hand revolution
MATERIALS	Maincase—Bronze Bypass Chamber—Rocksyn® (Bronze optional) Turbine Chamber—Synthetic Polymer (Bronze optional) Piston—Synthetic Polymer Turbine—Polypropylene Valve—Bronze Test Plug—2" Tapered Pipe Threads (test nipple and valve optional) Trim—Stainless Steel

SINGLE REGISTER HIGH-PERFORMANCE COMPOUND METER
Size 6" (DN 150mm)

Head Loss Curve

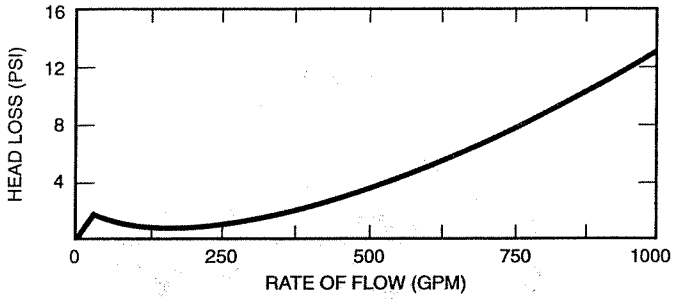

Accuracy Curve

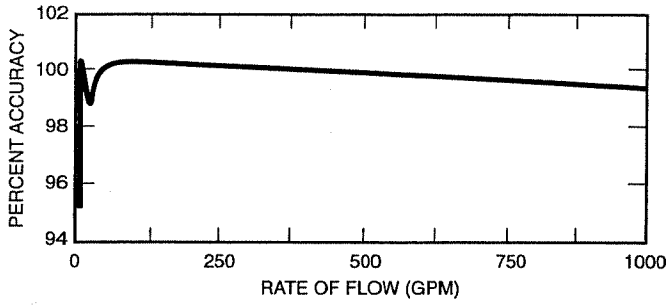

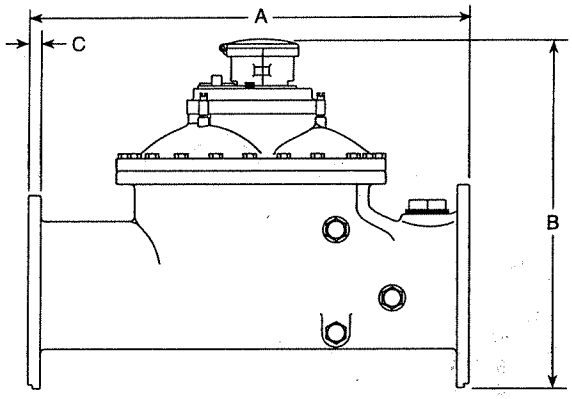

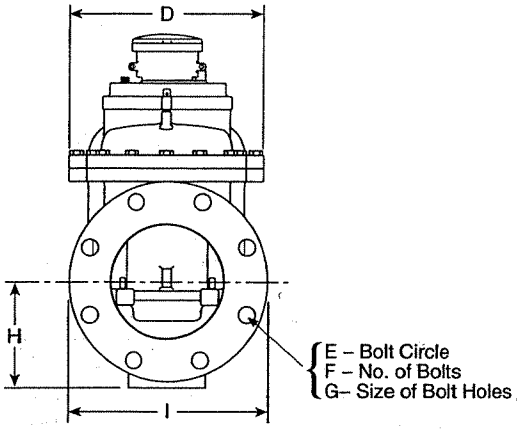

Meter and Pipe Size	Dimensions									Net Weight	Shipping Weight
	A	B	C	D	E	F	G	H	I		
6"	24"	18-3/4"	7/8"	11"	9-1/2"	8	7/8"	5-1/4"	11"	155 lbs.	160 lbs.
DN 150mm	610mm	476mm	22mm	279mm	242mm	8	22mm	146mm	279mm	70 kg	72.5 kg

Remote Reading Systems—For use with all sizes of Invensys Water Meters

All Invensys AMR systems work with the same absolute encoder Electronic Communications Registers (ECR), enabling the utility to mix and match or easily move from one system to another without changing registers for each.

The TouchRead® Automated Meter Reading and Billing System—is a multi-purpose encoder remote system suitable for indoor and/or outdoor use. The ECR Register uses a wired connection between the meter and an outside remote for inside set meters—or a pitlid mounted module, enabling underground meters to be read automatically without opening the meter box or vault. All wired connections and terminals of the TouchRead PitLid (TR/PL) modules and registers are fully sealed at the factory using a special process to ensure protection from water infiltration. The connection terminals of ECR/WP registers are also factory sealed.

Meters equipped for TouchRead System reading can be read with a visual reading device, stand alone AutoGun, and/or reading gun with an AutoRead Hand-Held Device. For more information on TouchRead System equipment refer to bulletins AMR-TR, AMR-401, AMR-403, AMR-312 and EXSUMHH.

PhonRead® AMR—is a reliable telephone based call-in system that does not require batteries for operation. It also does note require equipment to be installed at telephone company facilities. PhonRead Meter Interface Units (MIU) automatically call "in" to the utility office for transferring meter reading data from the meter site to a PC. PhonRead is a transparent AMR system that does not interfere with customers' telephone service. For more information refer to bulletins AMR-PR and AMR-302.

RadioRead® AMR—uses superior Direct Sequence Spread Spectrum modulation to provide reliable, safe and virtually interference free radio-based transmission of reading data from underground or inside-set meters that are equipped with Meter Transceiver Units (MXU). A choice of meter reading options is available. A radio frequency hand-held device (RF-HHD) can be used by a meter reader on foot. The RF-HHD can also be used to collect readings from TouchRead equipped meters, or for manual meter reading entries. A more powerful Vehicle Transceiver Unit (VXU) can be used in any car or truck to read meters while on the move. (A dedicated meter reading vehicle is not required.) For more information refer to bulletins AMR-RR, AMR-301 and AMR-303, and AMR-401.

MultiRead® Port Expanders—can provide the capability to connect multiple ECR equipped meters to a single PhonRead MIU or RadioRead MXU to save the utility time and money for installations such as apartment complexes and shopping centers. Refer to bulletin AMR-305, AMR-306 and AMR-308.

invensys
Metering Systems

Invensys Metering Systems
P.O. Box 487
450 N. Gallatin Avenue
Uniontown, PA 15401

1-800-METER-IT
1-800-638-3748

FAX (Direct to Factory)
Local: (724) 439-7729
Toll Free: 1-800-888-2403

Web site: www.ims.invensys.com
select *North American Water*
Email: h2oinfo@ims.invensys.com

AUTHORIZED INVENSYS DISTRIBUTOR

SENSUS 2″ and 3″ SIZE COMPOUND WATER METER INDIVIDUAL CHAMBER OPERATION VS. 2 REGISTER COMPOUND

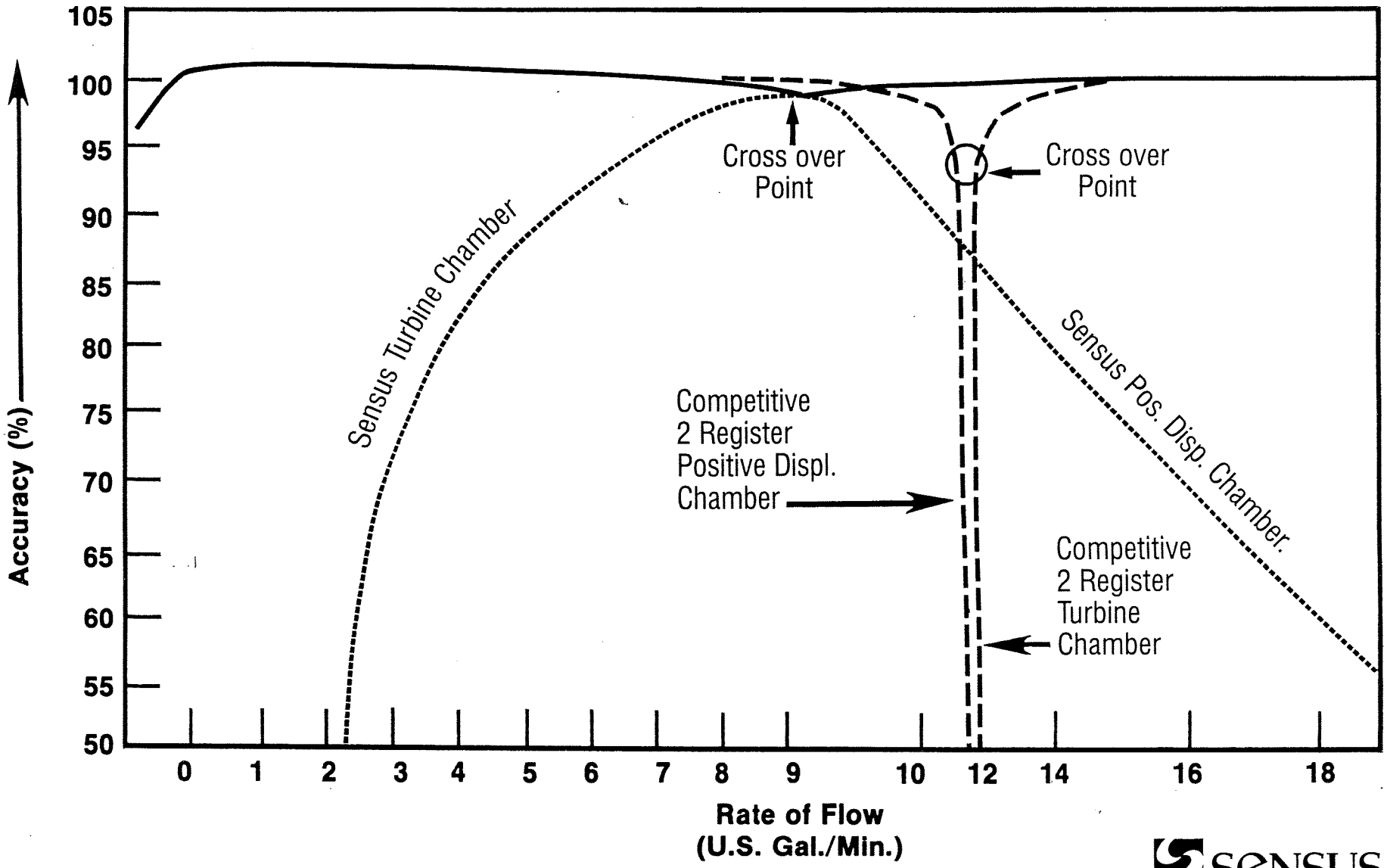

SENSUS™

SUPPLEMENTAL TERMS AND CONDITIONS:

THESE SUPPLEMENTAL TERMS AND CONDITIONS ARE IN ADDITION TO THE GENERAL INSTRUCTIONS, TERMS AND CONDITIONS AND, IN THE EVENT THERE IS A CONFLICT BETWEEN THE PROVISIONS OF THE GENERAL INSTRUCTIONS, TERMS AND CONDITIONS AND THESE SUPPLEMENTAL TERMS AND CONDITIONS, THE PROVISIONS OF THESE SUPPLEMENTAL TERMS AND CONDITIONS SHALL CONTROL.

AWARD OF CONTRACT - LOW. RESP. OFF. - OPEN END:

THE CITY INTENDS TO AWARD ON OPEN-ENDED ANNUAL CONTRACT FOR MERCHANDISE, PARTS AND/ OR SUPPLIES, AS NEEDED, ON THE BASIS OF THIS REQUEST. THE CONTRACT WILL BE AWARDED TO THE RESPONSIVE AND RESPONSIBLE OFFEROR WHOSE "ALL OR NONE" TOTAL PRICE IS LOWEST AFTER ALL APPROPRIATE DISCOUNTS ARE APPLIED. IF NO RESPONSIVE "ALL OR NONE" OFFERS ARE RECEIVED, THE CITY RESERVES THE RIGHT TO AWARD THE CONTRACT TO THE LOWEST RESPONSIVE AND RESPONSIBLE OFFEROR WHO OFFERS AT LEAST AS MANY ITEMS AS ALL OTHER OFFERORS OR AWARD A CONTRACT OR CONTRACTS ON A PER ITEM BASIS, WHICHEVER IS IN THE BEST INTEREST OF THE CITY OF ALBUQUERQUE.

CITED MODEL:

THE MODEL(S) CITED HEREIN IS (ARE) INTENDED ONLY AS A REFERENCE; HOWEVER ANY MODEL OFFERED MUST MEET OR EXCEED ALL SPECIFICATIONS OF THE CITED MODEL(S) BY VIRTUE OF PERFORMANCE AND/OR PHYSICAL SPECIFICATIONS.

ESTIMATED QUANTITIES, NOT AN ORDER:

THE ESTIMATED QUANTITIES LISTED DO NOT CONSTITUTE AN ORDER AND ARE NOT NECESSARILY COMPREHENSIVE; THEY ARE A REPRESENTATIVE SAMPLE OF WHAT IS LIKELY TO BE PURCHASED DURING THE COURSE OF A CONTRACT RESULTING FROM THIS REQUEST AND WILL BE USED ONLY TO EVALUATE OFFERS AND AWARD SUCH A CONTRACT. THESE QUANTITIES AS STATED MAY INCREASE OR DECREASE DEPENDING ON THE ACTUAL NEEDS OF THE CITY. ACTUAL ORDERS WILL BE PLACED BY THE USER.

FREIGHT, AS INDICATED:

F.O.B. POINT OTHER THAN INDICATED BY THE CITY WILL NOT BE ACCEPTABLE.

PRICE ESCALATION:

THIS OFFER MAY BE CONSIDERED FOR ESCALATION UNDER THE FOLLOWING CONDITIONS:

A. OFFERED PRICES MUST BE FIRM FOR A LEAST NINETY (90) CALENDAR DAYS AFTER WRITTEN NOTIFICATION OF A CONTRACT.

B. ALL PRICE INCREASES SHALL BE ACCOMPANIED BY A CERTIFIED LETTER FROM THE OFFEROR'S SUPPLIER SHOWING THE PRICE INCREASE TO THE OFFEROR.

C. ALL INVOICES OF THE OFFERED ITEMS, FROM SUPPLIERS TO THE OFFEROR, SHALL BE SUBJECT TO AUDITING BY THE CITY AND FURNISHED WITHOUT DELAY UPON REQUEST.

D. THE CITY RESERVES THE RIGHT TO CANCEL A CONTRACT RESULTING FROM THIS REQUEST AND SOLICIT A NEW CONTRACT IF THE ESCALATED PRICE IS ABOVE THE CURRENT OPEN MARKET PRICE FOR THE SAME COMMODITY. CANCELLATION OF THE CONTRACT SHALL NOT AFFECT ANY OUTSTANDING ORDERS.

E. ALL REVISIONS OF THE PRICE LIST SHALL BECOME EFFECTIVE WHEN THEY ARE RECEIVED, IN WRITING, AND ACCEPTED, BY THE PURCHASING OFFICE OF THE CITY, PROVIDED THAT THEY DO NOT CONFLICT WITH ITEM (F.) OF THIS PARAGRAPH.

F. ALL APPROVED PRICE CHANGES RESULTING FROM THIS ESCALATION CLAUSE SHALL BE FIRM FOR A PERIOD OF NINETY (90) CALENDAR DAYS AFTER ACCEPTANCE IN WRITING BY THE CITY.

G. THE OFFEROR SHALL BE LIMITED TO A MAXIMUM OF TWO PRICE ESCALATIONS PER CONTRACT PERIOD UNLESS OTHERWISE SPECIFIED IN THIS REQUEST.

H. THE OFFEROR SHALL PROVIDE TO THE CITY WRITTEN NOTICE OF ANY REQUESTED PRICE CHANGES WHICH BECOME EFFECTIVE UPON WRITTEN ACCEPTANCE BY THE CITY PURHCASING OFFICE.

I. IF THE OFFEROR RECEIVES ANY PRICE DE-ESCALATIONS FROM THE SUPPLIER OF GOODS SOLD TO THE CITY THROUGH A CONTRACT RESULTING FROM THIS REQUEST, THE OFFEROR IS RESPONSIBLE FOR NOTIFYING THE CITY WITHIN TWENTY-FOUR (24) HOURS OF SUCH DE-ESCALATIONS, AND PASSING THOSE PRICE CHANGES ON TO THE CITY IMMEDIATELY.

WAREHOUSE RECEIVING HOURS:

8 A.M. THROUGH 3 P.M. MONDAY THROUGH FRIDAY, EXCLUDING CITY RECOGNIZED HOLIDAYS.

WAREHOUSE STOCK NUMBERS:

ALL ITEMS DELIVERED SHALL BE INDIVIDUALLY MARKED WITH THE CITY OF ALBUQUERQUE WAREHOUSE STOCK NUMBER.

CITY OF ALBUQUERQUE
Purchasing Division

OFFEROR COMMENTS FORM

Bid No._____

It is requested that offerors provide any additional information relating to their offer that will assist in the evaluation of such without having to ferret out information concerning the goods or services you intend to provide.

Information pertains to the following (please check applicable box):

- ☐ **Equivalent Product**
- ☐ **Clarification**
- ☐ **Exception(s) to Requirements**
- ☐ **General or Miscellaneous Comments**

If additional space is required, please use reverse side of the form or attach additional document(s).

_____	_____	_____
Name of Offeror	**Signature (Authorized Representative)**	**Date**

INSTRUCTIONS FOR
LOCAL PREFERENCE CERTIFICATION FORM

1. **ALL INFORMATION MUST BE PROVIDED.** A 5% local preference is available for this procurement. To qualify for this preference, an Offeror MUST complete and submit this Form WITH ITS OFFER. If an offer is received without the Form attached, completed, signed and certified, or if the Form is received without the required information, the preference will not be applied. THE FORM OR A CORRECTED FORM WILL NOT BE ACCEPTED AFTER THE DEADLINE FOR RECEIPT OF BIDS OR PROPOSALS.

2. **LOCAL PREFERENCE PRECEDENCE OVER STATE PREFERENCE.** The local preference takes precedence over the State Resident Business Preference and only one of the two preferences will be applied to any one offer. If it is determined that the local preference applies to one or more Offerors in any solicitation, the State Resident Business Preference will not be applied to any offers.

3. **PHYSICAL LOCATION MUST BE STATED.** To qualify for the local preference, a business must have a location in the Albuquerque Metropolitan Area (Abq. Metro Area). The business location inserted on the form must be a physical location, street address or such. DO NOT use a post office box or other postal address.

4. **ADDITIONAL REQUIREMENT.** To qualify for this preference, the principal Offeror (i.e. the business, NOT the individual signing the form) if it is a corporation, must be a New Mexico corporation with its articles of incorporation filed with the New Mexico Public Regulation Commission.

5. **DEFINITIONS.** The following definitions apply to this preference:

   - The Abq. Metro Area includes all locations within the City of Albuquerque and Bernalillo County, and within any municipality (i.e. incorporated city, town or village) continguous to the City of Albuquerque and Bernalillo County.

   - A resident of the Abq. Metro Area is a person who occupies a dwelling in the Area and who manifests an intent to maintain that dwelling on a permanent basis.

   - A principal Offeror is a single Offeror; a business which is the prime contractor or one of the prime contractors and not a subcontractor; or a partner or joint venturer submitting an offer in conjunction with other businesses.

6. **ADDITIONAL DOCUMENTATION.** If requested, a business will be required to provide, within 10 working days of the request, documentation to substantiate the information provided on the form.

LOCAL PREFERENCE CERTIFICATION FORM

RFP/RFB NO: _____

Business Name: _____

Business Location (<u>in Abq. Metro Area</u>): _____

_____

Business Type: SELECT ONE

☐ Corporation -- Indicate state of incorporation. ☞ _____

☐ Partnership -- Indicate "general" or "limited". ☞ _____

☐ Sole Proprietorship (Single Owner with employees)

☐ Individual (Single Owner/No employees)

☐ Other -- Indicate status. ☞ _____

Additional Information: (PROVIDE IF BUSINESS IS A CORPORATION)

Date of incorporation in the State of New Mexico: ☞ _____

CERTIFICATION

I hereby certify that the business set out above is the principal Offeror submitting this offer or is one of the principal Offerors jointly submitting this offer (e.g. as a partnership, joint venture). I hereby certify that the information which I have provided on this form is true and correct, that I am authorized to sign on behalf of the business set out above and, if requested by the City, will provide, within 10 days of notice, the necessary documents to substantiate the information provided on this form.

Signature of Authorized Individual: _____ ☞

Printed Name: _____

Title: _____

Date: _____

9/24/02

YOU MUST RETURN THIS FORM <u>WITH</u> YOUR OFFER

CITY OF ALBUQUERQUE

GENERAL INSTRUCTIONS, TERMS, AND CONDITIONS

IMPORTANT: READ CAREFULLY BEFORE SUBMITTING OFFERS. FAILURE TO DO SO SHALL NOT ABSOLVE THE OFFEROR FROM RESPONSIBILITY TO PERFORM OR DELIVER AS SPECIFIED.

1. Applicability: Except as otherwise specifically provided in this Request, these General Instructions, Terms, and Conditions shall govern the procurement of the items specified in this Request. In the event of a conflict between these General Instructions, Terms, and Conditions, Supplemental Conditions or the specifications of this bid, the order of applications shall be the Specifications, Supplemental Conditions, and the General Instructions, Terms and Conditions. In addition, the Public Purchases Ordinance (Section 5-5-1 *et seq*. ROA 1994) and promulgated Rules and Regulations shall apply.

2. Definitions: As used in this request, the definitions of the Public Purchases Ordinance (Section 5-5-2 ROA 1994) apply including the following:

A. "City" means the City of Albuquerque, New Mexico.

B. "Contract" means any agreement for the procurement of goods, services, construction or concessions. A purchase order issued in response to an offer constitutes a contract.

C. "Contractor" means an Offeror who has been awarded a contract.

D. "Offeror" means a business that submits a response to a competitive solicitation.

E. "Purchase Order" means a document issued by the Purchasing Office directing the Contractor to deliver goods, services or construction.

F. "Purchasing Office" means the Purchasing Division of the Department of Finance & Administrative Services of the City.

G. "Purchasing Officer" means the person charged with the responsibility of administering the Purchasing Office.

H. "Request" means all documents, including those attached or incorporated by reference, issued by the Purchasing Office for soliciting offers to provide goods, services or construction.

I. "Responsible Offeror" means a business which has the capability in all respects to perform fully the contract requirements set out in the competitive solicitation, and the integrity and reliability which will assure good faith performance, and who has not violated or attempted to violate any provision of law or ethical conduct. Factors which may be considered in determining the Offeror's capability to perform, among others, are its financial resources, production or service facilities, service reputation and experience.

J. "Responsive Offer" means a written offer to furnish goods, services or construction in conformity with standards, specifications, delivery terms and conditions, and all other requirements established in a competitive solicitation.

3. <u>Preparation of Offer:</u>

A. Submission: All offers must be submitted on the Request for Bid Form enclosed. Failure to do so may disqualify your offer. It is the responsibility of the Offeror to submit sufficient additional information to allow for a thorough evaluation of the offer submitted.

B. Preparation Method: All information required in this Request must be typewritten or handwritten in ink and must be legible. Erasures or other changes must be initialed by the person signing the offer. Each offer must be signed on the appropriate pages by an individual authorized to bind the Offeror submitting the offer.

C. Unit Prices: The unit price for each item offered shall be shown unless otherwise specified. In the case of a discrepancy between the unit price and the extended price, the unit price will govern in determining the price used for evaluation.

Unit prices offered should be for the units specified.

D. Delivery Time: Delivery time stated in the specifications shall apply. Deviations by the Offeror shall be stated on the Exception Form. Time, if stated in number of days, will be consecutive calendar days.

E. Payment Terms: The Request for Bid Form provides space for the Offeror to identify the payment terms that the Offeror is offering. Terms of less than twenty (20) days will not be considered. The discount term shall not begin until the goods, services or construction have been delivered and accepted and the correct invoice received in the City's. Accounts Payable Office.

Prompt payment discounts will NOT be used as a factor in determining the lowest responsive offer.

F. Freight Policy: Freight will be F.O.B. Destination (as indicated on the Request Form), Freight Prepaid, unless otherwise specified in this Request.

G. Taxes: Offerors shall include any applicable gross receipts taxes in its offered price, unless specified otherwise in this request, and such offer will be construed in that manner. The City will, under appropriate circumstances, furnish a non-taxable transaction certificate. <u>Determination of whether the tax is due and payment of the tax is the responsibility of the Offeror</u>. Applicable taxes are to be included in each invoice due and may not be billed more than sixty (60) days after providing the services to which the taxes apply.

H. New Material, Etc.: All materials, supplies, equipment, and vehicles specified in this Request shall be new, the latest in production and manufactured within the last twelve (12) months (computed from the date and time of offer opening) unless otherwise indicated. This does not apply to materials, supplies, equipment or vehicles used by the Contractor to provide the required items of tangible personal property, services or construction.

I. Warranty: Materials furnished by the successful Offeror shall be accompanied by the manufacturer's written warranty against defects in quality, craftsmanship, and materials.

The Offeror agrees that the items of tangible personal property, services or construction furnished under any contract resulting from this Request shall be covered by the most favorable

commercial warranties the Offeror gives to any customer for such items. Further, the Offeror agrees that the rights and remedies provided in such warranties extend to the City and are in addition to and do not limit any rights afforded to the City by any other clause of this Request. The Offeror agrees not to disclaim warranties of fitness for a particular purpose of merchantability. Warranties shall become effective at the time of acceptance.

J. Equivalent Offers: Where a product is characteristic of a sole manufacturer, or where a brand name is indicated in the specifications, it shall be defined to mean minimum acceptable level or minimum quality required by the City unless the specifications state that no substitutions or equivalents will be allowed. If the Offeror offers an item other than the one specified, which the Offeror considers comparable, the manufacturer's name and model number of that item must be specified in the offer and sufficient performance specification and descriptive data provided to permit a thorough evaluation. Failure to provide the appropriate information may result in disqualification of the offer.

K. Exceptions to Specifications: Offerors are to state any exceptions taken to this Request on the Specifications Exception Form. If no exceptions are stated, the Offeror is required to furnish the items exactly as specified and to comply with all other requirements of this Request.

L. Indemnity: The Offeror to whom an award has been made as a result of this Request expressly agrees to defend, indemnify and save harmless the City and its officers, agents and employees from and against any and all claims, suits demands, actions, or proceedings of every nature and description brought because of any injury or damage received or sustained by any person, persons, or property arising out of the Offeror's providing the goods, services or construction pursuant to the offer or by reason of any act or omission, neglect or misconduct of the Offeror, the agents, employees or subcontractors of the Offeror or the agents or employees of any subcontractor of the Offeror. The indemnity required herein shall not be limited by reason of the specification of any particular insurance coverage.

M. Patent Indemnity: If any item furnished pursuant to any contract resulting from this Request shall be covered by any patent, copyright, or application for patent or copyright, the Offeror shall defend, indemnify and save harmless the City from any and all loss, cost or expense or any all claims suits, or judgments as a result of the use of such item in violation of rights under such patent, copyright, or application for patent or copyright.

N. Public Inspection: Each offer shall be open to public inspection, except to the extent the Offeror designates trade secrets or other proprietary data to be confidential. Material so designated shall accompany the offer and each page shall be clearly marked and readily separable from the offer in order to facilitate public inspection of the nonconfidential portion of the offer. Prices and makes and models or catalog numbers of the items offered, deliveries and terms of payment shall be publicly available at the time of the opening of the offer regardless of any designation to the contrary. The City shall endeavor to restrict distribution of the material designated as confidential to only those individuals involved in the review and analysis of the offers. Offerors are cautioned that materials designated confidential may nevertheless be subject to disclosure to any New Mexico citizen under the Inspection of Public Records Act (Sections 14-2-1 through 14-2-3 N.M.S.A. 1978).

O. Material Safety Data Sheets: To comply with the Occupational Health and Safety Regulation 1910.1200 for general standards on handling hazardous materials, material safety data sheets may be required for all or part of the products included on this Request. It is the responsibility of the Offeror to make this determination and, if required, a copy of the MSDS must accompany

the product when delivered to the end user. Failure to comply with this requirement may cause the delivery of products to be rejected and all costs related to such action to be borne by the Offeror.

P. Licenses and Certifications: The Offeror must provide proof, in a manner acceptable and within the time period specified by the Purchasing Office, but prior to award, unless otherwise specified in this Request, that they are licensed and certified by the appropriate agencies as required by law to perform the services or provide the goods specified in this Request.

4. Debarment or Ineligibility Compliance: By submitting its offer in response to this Request, the Offeror certifies that (i) it has not been debarred or otherwise found ineligible to receive funds by any agency of the federal government, the State of New Mexico, any local public body of the State, or any state of the United States; and (ii) should any notice of debarment, suspension, ineligibility or exclusion be received by the Offeror, the Offeror will notify the City immediately.

5. Ethical Conduct: By submitting its offer in response to this Request, the Offeror certifies that:

A. It has not offered, given or agreed to give to any City employee or former employee, a gratuity or offer of employment to influence the preparation of or recommendation of award of this Request;

B. It has not retained a person to solicit or secure a City Contract for a contingent fee;

C. It has not taken any action in restraint of free competitive bidding in connection with this Request;

D. It has not in any way violated the ethical conduct or other provisions of the City's Public Purchases Ordinance; and

E. It currently has no interest and shall not acquire any interest, direct or indirect, which would conflict in any manner or degree with its performance of any contract resulting from this Request.

6. Requests for Explanations by Offerors:

A. Requests for Explanation: Any explanation desired by the Offeror regarding the meaning or interpretation of specifications or any part of this Request must be requested in writing and received in the Purchasing Office not less than ten (10) working days before the offer opening date.

B. Responses to Requests: Oral explanations or instructions given prior to the opening of the offer shall not be binding. Any official explanations must be issued, in writing, by the Purchasing Division.

7. Addenda:

Addenda: Changes or amendments to specifications, conditions or provisions herein may be initiated ONLY through the Purchasing Office in the form of a written addendum.

Any addenda shall become a part of this Request and should be acknowledged either by being signed and returned with the offer or through letter or telegram that arrives prior to the opening of the offer.

Failure to do so may result in disqualification of the offer.

It is the responsibility of all vendors considering making an offer in response to this Request to ensure that they have received all addenda prior to making an offer. Offerors may contact the Purchasing Division to obtain information regarding any addenda issued. Failure to obtain an addendum shall not be grounds for overturning a recommendation of award.

8. <u>Clarification of Offers</u>:

The City may, in the evaluation of offers, request clarification from Offerors regarding their offers, obtain additional material or literature, and pursue other avenues of research as necessary to insure that a thorough evaluation is conducted.

9. <u>Submission of Offer</u>:

A. Time: Offers not received by the time and date indicated on the Request will not be accepted.

B. Hand Carried: Offers may be hand carried to the City Clerk's Office on the eleventh (11th) floor of the Albuquerque/Bernalillo County Government Center, 1 Civic Plaza, Albuquerque, New Mexico.

C. Mailed: Offers may be mailed to the Attention of the City Clerk, City of Albuquerque, P.O. Box 1293, Albuquerque, New Mexico, 87103. The City shall not be responsible for offers that are mailed and not received by the opening date and time specified in the solicitation.

Note: The City picks up mail at the post office once every morning at 7:00 AM (local time). ALL SEALED BIDS MUST BE RECEIVED IN THE OFFICE OF THE CITY CLERK BY THE TIME SPECIFIED ON PAGE ONE OF THIS RFB. THE TIME RECORDED IN THE CITY CLERK'S OFFICE WILL CONTROL.

D. Receipts: Receipts for hand delivered offers shall be issued by the City Clerk's Office (upon request) for offers which are hand carried.

E. Envelope Preparation: The envelope/package containing an offer must be sealed and the following identifying information legibly written or typed on the outside:

1) Name of Offeror
2) Request Number assigned by the City to the Request
3) Opening date as identified on the Request or subsequent addenda

F. No Other Methods of Offer Delivery: Neither telephone, telegraphic, or facsimile Offer shall be accepted.

10. <u>Civil Rights Compliance</u>:

Offeror certifies and agrees, by submittal of its offer, to comply and act in accordance with all provisions of the Albuquerque Human Rights Ordinance, the New Mexico Human Rights Act, Title VII of the U.S. Civil Rights Act of 1964, as amended, and all federal statutes and executive orders, New Mexico statutes and City of Albuquerque ordinances relating to the enforcement of civil rights.

Offeror additionally certifies and agrees to abide by and cooperate in the implementation of the policies

and practices set forth in the City's Affirmative Action Plan.

Questions regarding civic rights or affirmative action compliance requirements should be directed to the City of Albuquerque Human Rights Division, Community Services Department.

11. <u>Americans with Disabilities Act Compliance</u>:

Offeror certifies and agrees, by submittal of its offer, to comply and act in accordance with all applicable provisions of the Americans with Disabilities Act of 1990 and Federal regulations promulgated thereunder.

12. <u>Withdrawal of Offers</u>:

An offer may be withdrawn in person at any time BEFORE the scheduled opening of offers, provided a receipt for the withdrawn offer is signed by the Offeror or the Offeror's authorized representative. The City reserves the right to request proof of authorization to withdraw an offer.

13. <u>Opening of Offers</u>:
Time and Place: Offers will be opened by the City Clerk at the time and place identified in this Request. Openings are open to the public. Offerors are encouraged to attend.

14. <u>Disqualification of Offer</u>:

Any offer received from an Offeror that is, at the time of submitting its offer or prior to receipt of award of a contract, debarred by or otherwise ineligible to receive funds from any agency of the federal government, the State of New Mexico, any local public body of the State, or any state of the United States, shall be rejected.

In addition, the City reserves the right to reject an offer for, including but not limited to, any one or more of the following circumstances:

A. In the past the Offeror has failed to comply with previous contractual commitments or offers to the City.

B. In the opinion of the City the Offeror is not capable of providing the offered goods, services, or construction as offered or required by the Request or is otherwise not a responsible Offeror.

C. The Offeror has not provided sufficient or detailed information which allows for the evaluation of the offer.

D. In the opinion of the City, the offered prices are higher than the prices for which the specified items or services can be purchased on the open market.

E. The Offeror failed to properly fill in any space on the Request Form and attached documents where information or a signature is required.

F. The Offeror did not, at the time the offer is made, have an appropriate New Mexico Contractor's License or Certification when one is required by law, regulation or this Request.

G. The Offeror failed to submit with their offer, bid bonds or other material requirements of the Request or has otherwise submitted a non-responsive offer.

H. **There are unauthorized additions, conditions, alternate proposals or other irregularities of any kind which might make the offer incomplete, indefinite or ambiguous in meaning.**

I. **Offer was not submitted in ink or typewritten or there is any erasure or alteration of words or figures relating to pricing which is not initialed in ink by the Offeror.**

J. **The City determines that an offer contains any misrepresentations whatsoever.**

15. **Rejection/Cancellation of Offers:**

Any solicitation, prior to opening or after opening, may be cancelled or any or all offers may be rejected in whole or in part when it is in the best interest of the City.

16. **Minor or Technical Irregularities:**

Minor or technical irregularities in an offer, when there is no effect on price, quality or quantity may be waived and clerical errors in an offer may be corrected, if permitted by the Purchasing Officer and are in the best interest of the City.

17. **Nonconforming/Conditional, or Counter Offers:**

An offer which is nonconforming or conditional, whether in part or in whole, will be rejected.

18. **Offer Analysis:**

The City reserves the right to analyze, examine and interpret any offer for a minimum period of ninety (90) consecutive calendar days, after the scheduled time for the opening of offers. Offers may not be rescinded during this period except for good cause and with the written approval of the Purchasing Officer. In those situations where the analysis/evaluation exceeds the ninety (90) calendar days, Offerors may withdraw their offers from consideration.

19. **Award of Contract:**

A. **When Award Occurs: The award of a contract occurs when a Purchase Order is issued or other evidence of acceptance by the City is provided to the Offeror. A Recommendation of Award does not constitute award of contract.**

B. **Award: If a contract is awarded, it shall be awarded to the responsive and responsible Offeror whose offer is lowest in total price and is the most advantageous to the City, specifications and other factors considered.**

C. **Basis of Award: The City reserves the right to award a contract based on this Request in total or by group of items, on the basis of individual items, or any combination of these, which in the judgment of the Purchasing Officer, best services the interests of the City, unless otherwise stated in this Request.**

D. **Increase of Quantities: The City reserves the right to increase the quantities of items of tangible personal property, services or construction to be provided within a twelve (12) month period, under the terms of the Contract, at the same prices, with the consent of the Contractor.**

E. Decrease of Quantities: The City reserves the right to decrease the quantities of items of tangible personal property, services or construction to be provided under the terms of the Contract. However, the Contractor shall be offered an opportunity to cancel the portion of the Contract affected by such a decrease if the Contractor is not able to meet the contracted prices by delivering the decreased amount. This clause shall not have effect if the Contract was originally awarded based on estimated quantities.

F. Contract Changes: In no case shall a contract be changed without the prior written approval of the Purchasing Officer.

G. Debarment/Cancellation of Contract: Upon receipt of notice of debarment of an Offeror awarded a contract as a result of this Request for Bids (the "Contractor"), or other ineligibility of the Contractor to receive funds from any agency of the federal government, the State of New Mexico, any local public body of the State, or any state of the United States, the City shall have the right to cancel the contract with the Contractor for cause as provided in Section 25 below.

H. Local and Resident Preference: A five percent (5%) Preference may be afforded an Offeror who qualifies in accordance with the City's Public Purchases Ordinance. If no offers are received which qualify for a Local Preference, a 5% Resident Business Preference may be afforded an Offeror who has been certified by the State of New Mexico Purchasing Division, in compliance with State laws.

Information regarding the Public Purchases Ordinance and the application of the Local or Resident preference can be obtained by contacting the Purchasing Division at (505) 768-3344.

For consideration for the Local Preference the Offeror must complete the Local Preference Certification Form in accordance with the form instructions and return the Local Preference Certification Form with its offer.

To qualify for the Resident Preference, the Offeror must provide its assigned Resident Certification Number with its offer (an appropriate place is designated in the Request). If an Offeror does not provide its assigned Resident Certification Number with its offer, the offer shall not be considered as made by a resident business and no preference shall be applied during the analysis of that offer.

NOTE: Your State Tax Number is NOT your Resident Certification Number.

20. <u>Goods Produced Under Decent Working Conditions</u>:

It is the policy of the City not to purchase, lease, or rent goods for use or for resale at City-owned enterprises that were produced under sweatshop conditions. The Offeror certifies, by submittal of its offer in response to this solicitation, that the goods offered to the City were produced under decent working conditions. The City defines under decent working conditions as production in a factory in which child labor and forced labor are not employed; in which adequate wages and benefits are paid to workers; in which workers are not required to work more than 48 hours per week (or less if a shorter workweek applies); in which employees are free from physical, sexual or verbal harassment; and in which employees can speak freely about working conditions and can participate in and form unions. [*Council Bill No. M-8, Enactment No. 9-1998*]

21. <u>Protest Process</u>:

A. Request Documents: Protests concerning the specifications of this Request or other matters relating to the solicitation documents must be received by the Purchasing Officer no later than ten days prior to the deadline set for the receipt of offers.

B. Recommendation of Award: Protests concerning other matters relating to this Request must be filed with the Purchasing Officer not later than 5:00 p.m. of the date stipulated in the Recommendation of Award.

C. Timely Protests: Protests must be received by the Purchasing Officer prior to the appropriate deadline as set out in A. and B. of this Section or they will not be considered valid. The Purchasing Officer may waive the deadline for good cause, including a delay caused by the fault of the City. Late delivery by the U.S. Postal Service or other carrier shall not be considered good cause.

D. Required Information from Offeror: All protests must be submitted in written form and must be legible. Facsimile, telephone or telegraphic protests will not be accepted. Protest shall contain at a minimum the following:

1) Name and address of the protesting party
2) The solicitation/Request Number
3) A clear statement of the reason(s) for the protest
4) Details concerning the facts which support the protest
5) Attachments of any written evidence available to substantiate the claims of the protest
6) Statement specifying the ruling requested

E. Protest Hearing: If a hearing is requested, the request must be included in the protest and received within the time limit to be allowed. The filing fee of twenty dollars ($20.00) must accompany the request for hearing. The grant of a hearing shall be at the discretion of the Purchasing Officer following review of the protest.

F. Delivery of Protest: Protests may be hand-delivered. Protests which are mailed should be addressed as follows:

Purchasing Officer
City of Albuquerque
Purchasing Division
P.O. Box 1293
Albuquerque, NM 87103

Envelope should also clearly indicate "PROTEST" and the solicitation number.

G. Purchasing Officer Action: The Purchasing Officer will, after evaluation of a protest, issue a response. Only issues outlined in the written protest will be considered by the Purchasing Officer or may be raised at a protest hearing.

22. <u>Delivery, Acceptance and Guarantee</u>:

A. No Delivery Before Purchase Order is Issued: No Offeror, including the Offeror to whom an award is made shall deliver any item of tangible personal property, commence services or construction prior to the issuance of a Purchase Order or Notice to Proceed issued by the City

Purchasing Division.

B. Cancellation for Non-Delivery: The City reserves the right to cancel any order not delivered by a guaranteed date stipulated in any contract resulting from this Request without liability on the City's part.

C. Acceptance of Delivery: Acceptance by the City of any delivery shall not relieve the Contractor of any guarantee or warranty, expressed or implied. Such acceptance of delivery shall not be considered an acceptance of services or materials not in accordance with the specifications. Such acceptance of delivery shall not waive the City's right to require replacement of defective material or inadequate service.

23. <u>Inspections</u>:

Prior to Acceptance of Delivery: All items of tangible personal property, services or construction found inferior to the quality specified in this Request, deficient or incorrect in weight, measurement, workmanship, handicraft or otherwise, may be rejected as a whole or in part and then shall be removed by the Contractor at the Contractor's own risk and expense promptly after notice of rejection. The Contractor shall assume responsibility for taking the necessary action to correct or replace the rejected items, within the time frame specified in the notice of rejection.

24. <u>Invoices and Payments</u>:

The Contractor shall submit an accurate invoice, in duplicate, for each purchase. Invoices shall refer to the Purchase Order Number, the Release Form Number if applicable, and shall be itemized unless otherwise specified in this Request. Invoices are to be mailed to: Accounting Division (Accounts Payable), City of Albuquerque, P.O. Box 1985, Albuquerque, New Mexico 87103. Invoices mailed or provided to any other entity will result in a delay in making payment. Offerors are encouraged to inquire if payments due are not received within thirty (30) days after delivery of goods/services and submittal of invoice by contacting the Accounting Division at (505) 768-3400.

25. <u>Default/Termination for Cause</u>:

If, through any cause, the Contractor fails to fulfill the Contractor's obligations under any contract resulting from this Request in a timely and proper manner, or if the Contractor, violates any of the covenants, agreements or stipulations of such contract, the City shall notify the Contractor of such violations in writing and allow the Contractor a reasonable time, set out in the notice, to correct the default. If the default is not corrected within the specified time period the City shall have the right to cancel the contract and any or all other current contracts with the Contractor, and, if applicable, to purchase the required goods or services from another source or sources. The City shall provide written notice to the Contractor specifying the effective date of cancellation. The notice of cancellation may be contained in the notice of default.

If a contract resulting from this Request is cancelled, the Contractor shall not be relieved of liability to the City for damages caused by its breach of the contract. The City reserves the right to recover such damages, including but not limited to any excess cost incurred in having to purchase contract goods/services from other sources by a deduction from an unpaid balance due to the Contractor, collection against a performance or labor and materials payment bond, a combination of these remedies, or any other legal method available. In addition, the Contractor may be removed from the Purchasing Office Vendor List or determined to be ineligible to respond to future solicitations, as being not responsible.

26. <u>Termination for the Convenience of the City</u>:

The City may terminate any contract resulting from this Request at any time by giving at least thirty (30) days' notice in writing of such termination to the Contractor. In such event, the Contractor shall be paid under the terms of the contract for all goods / services provided to and accepted by the City, if ordered or accepted by the City prior to the effective date of termination.

27. <u>Termination for Lack of Appropriations</u>:

Funding for the contract resulting from this Request has been appropriated by the City Council for the City's current fiscal year. Notwithstanding any other provisions in the contract resulting from this Request, its continuation beyond the end of the / any fiscal ear is contingent on the City Council making the appropriations necessary to fund the contract. If sufficient appropriations are not made the contract may be terminated at the end of the City's then current fiscal year upon written notice given by the City to the Contractor. Such termination shall not constitute a default. All payment obligations of the City and all of its interest in the contract will cease upon the date of termination. The City's decision as to whether sufficient appropriations are available shall be accepted by the Contractor and shall be final.

(6 / 23 / 04)