CITY OF ALBUQUERQUE

REQUEST FOR BID

THE CITY OF ALBUQUERQUE, PURCHASING OFFICE IS REQUESTING OFFERS FOR THE FOLLOWING GOODS OR SERVICES.

REQUEST NUMBER: RFB2007-090-SB
TITLE: CUSTOM BUILT WOOD & METAL COMPUTER TABLES
OPENING DATE: **JANUARY 10, 2007 (1:30 PM)**

FOR ADDITIONAL INFORMATION CONTACT:

SUZANNE BOEHLAND, SENIOR BUYER (505) 768-3397
CITY OF ALBUQUERQUE PURCHASING OFFICE
ALBUQUERQUE/BERNALILLO COUNTY GOVERNMENT CENTER
POST OFFICE BOX 1293
ONE CIVIC PLAZA
ALBUQUERQUE, NEW MEXICO 87103

THE CITY CLERK OF THE CITY OF ALBUQUERQUE WILL RECEIVE SEALED OFFERS FOR THE GOODS OR SERVICES DESCRIBED IN THIS REQUEST AT:

OFFICE OF THE CITY CLERK
CITY OF ALBUQUERQUE
POST OFFICE BOX 1293
ONE CIVIC PLAZA
ALBUQUERQUE, NEW MEXICO 87103

HAND CARRIED OFFERS WILL BE RECEIVED AT THE OFFICE OF THE CITY CLERK, ALBUQUERQUE/BERNALILLO COUNTY GOVERNMENT BUILDING, 11TH FLOOR, 1 CIVIC PLAZA, ALBUQUERQUE, NM.

OFFERS WILL BE RECEIVED UNTIL **1:30 PM JANUARY 10, 2007**

NOTE: USE OF THE MAIL SERVICE IS AT YOUR OWN RISK FOR PROPER DELIVERY.

OFFERS WILL BE OPENED PROMPTLY AT **1:30 PM** AT:
ALBUQUERQUE/BERNALILLO COUNTY GOVERNMENT CENTER
7TH FLOOR CONFERENCE ROOM
ONE CIVIC PLAZA
ALBUQUERQUE, NEW MEXICO

ALL OFFERORS ARE RESPONSIBLE FOR READING AND UNDERSTANDING ALL INFORMATION CONTAINED IN THIS REQUEST. OFFERORS ARE RESPONSIBLE FOR CHECKING TO ASSURE THAT NO PAGES ARE MISSING. PLEASE CHECK THIS PACKAGE UPON RECEIPT. IF ANY PAGES ARE MISSING PLEASE CONTACT THE BUYER NAMED ON THE COVER PAGE.

THE FOLLOWING INFORMATION AND FORMS ARE REQUIREMENTS FOR THIS REQUEST.

_____ OFFEROR COMPLIANCE FORM
COMPLETE ALL APPLICABLE INFORMATION, INCLUDING YOUR FEDERAL TAX IDENTIFICATION NUMBER, AND RETURN IT WITH YOUR OFFER.

_____ PRICING DETAIL FORM(S)
COMPLETE ALL PRICING DETAIL, INCLUDING UNIT AND EXTENDED PRICES (THIS IS VERY IMPORTANT).

_____ SPECIFICATION CHARTS
COMPLETE ALL PRICING DETAIL, INCLUDING BASE COST PER UNIT AND ADDITIONAL OPTIONS PRICING (THIS IS VERY IMPORTANT).

_____ LOCAL PREFERENCE CERTIFICATION FORM
IF APPLICABLE, COMPLETE SIGN AND RETURN WITH YOUR OFFER. THIS FORM MUST ACCOMPANY YOUR OFFER TO BE CONSIDERED FOR THE PREFERENCE.

_____ OFFEROR COMMENTS FORM
IF APPLICABLE, COMPLETE, SIGN AND RETURN WITH YOUR OFFER.

VENDOR NAME: _____

REQUEST NUMBER: RFB2007-090-SB
OPENING DATE: **JANUARY 10, 2007**

DELIVERY DATE: _____
(PLEASE SPECIFY)

REQUISITION NUMBER: P77061

FOR FURTHER INFORMATION CALL
SUZANNE BOEHLAND
AT (505) 768-3397

FOB POINT:
ALBUQUERQUE INTERNATIONAL SUNPORT
2200 SUNPORT BLVD SE
ALBUQUERQUE, NM 87106

BID BOND AMOUNT: $0.00
BID BOND PERCENT: 0%

PERFORM BOND AMOUNT: $0.00
PERFORM BOND PERCENT: 100%

IF APPLICABLE, BID AND PERFORMANCE BOND INFORMATION CAN BE FOUND IN THE SUPPLEMENTAL TERMS AND CONDITIONS.

DISCOUNT: PLEASE INDICATE YOUR FIRM'S DISCOUNT FOR PROMPT PAYMENT:
(THE MINIMUM ACCEPTABLE PERIOD IS 20 CALENDAR DAYS)

20 CALENDAR DAYS: _____ %

30 CALENDAR DAYS: _____ %

OTHER: _____ CALENDAR DAYS: _____ %

A 5% LOCAL PREFERENCE IS AVAILABLE FOR THIS BID. THE LOCAL PREFERENCE CERTIFICATION FORM MUST BE COMPLETED, CERTIFIED AND SUBMITTED WITH THE BID IN ORDER TO BE CONSIDERED.
LOCAL PREFERENCE REQUESTED: MFG? _____ BUSINESS? _____

PLEASE ENTER THE STATE RESIDENT PREFERENCE NUMBER HERE: _____ MFG?: _____ BUSINESS? _____

COMPLIANCE AGREEMENT

I, UNDERSTAND, HAVE READ AND EXAMINED THE GENERAL TERMS, CONDITIONS, ANY SUPPLEMENTAL TERMS AND CONDITIONS, AND THE SPECIFICATIONS OF THIS REQUEST AND AGREE TO COMPLY WITH ALL OF THEM.

SIGNATURE: _____ DATE: ____/____/____

NAME: _____ TITLE: _____
(PRINT OR TYPE)

COMPANY NAME: _____ EIN: _____

ADDRESS: _____

CITY: _____ STATE: _____ ZIP: _____

PHONE: ( ) _____ - _____ FAX: ( ) _____ - _____

DIRECT DEPOSIT PAYMENTS TRANSFERS ARE STRONGLY ENCOURAGED. TO ACCESS FORMS VISIT HTTP://WWW.CABQ.GOV/VENDOR/VENDORACH.HTML.

PRICING DETAIL FORM
RFB2007-090-SB

IN ACCORDANCE WITH THE ENCLOSED SPECIFICATIONS, TERMS AND CONDITIONS, FURNISH THE CITY WITH THE FOLLOWING:

ITEM NO.	QUANTITY/UNIT	ITEM	UNIT PRICE	TOTAL PRICE
1	10 EA.	SIT-DOWN COMPUTER TABLES	$ _____	$ _____
2	12 EA.	STAND-UP COMPUTER TABLES	$ _____	$ _____

TOTAL PRICE MUST INCLUDE ALL APPLICABLE TAXES, LICENSES, REGISTRATION, FREIGHT AND FEES.

ALL QUESTIONS MUST BE ADDRESSED IN WRITING (E-MAIL OR FAX) TO:

SUZANNE BOEHLAND, SENIOR BUYER
E-MAIL: SBOEHLAND@CABQ.GOV
FAX: (505) 768-3355

**********LAST ITEM **********

VENDOR NAME: _____

The City is requesting bids for custom built wood and metal computer tables. These tables will include:

- Power coated steel frame
- Transparent finish solid wood ends (legs).
- Glued up lumber with transparent finish table tops
- Power and data outlets, housing, and wire management.

The following specifications are the *minimum acceptable* for furnishing **CUSTOM BUILT WOOD AND METAL COMPUTER TABLES** to the City of Albuquerque as a result of this solicitation. Units furnished shall meet or exceed the physical and/or performance specifications of the specifications below. The City may waive any minor exceptions, if doing so is in its best interests. The City also reserves the right to negotiate options not listed on this solicitation or not initially offered by the vendor, subject to mutual agreement. Quantities are estimated. Actual purchases will be made subject to availability of sufficient funds.

STANDARD SPECIFICATIONS	MEETS SPECIFICATIONS *(circle appropriate answer)*	
1. General		
1.1. Submittals		
1.1.1. Shop Drawings. Bids shall include shop drawings. Drawings shall include:	YES	NO
1.1.1.1. Detail fabrication and installation of computer tables.	YES	NO
1.1.1.2. Plans, elevations, sections, and details of components and their connections.	YES	NO
1.1.1.3. Anchorage and accessory items.	YES	NO
1.1.2. Samples for Verification. Bidders shall provide upon request samples of the following:	YES	NO
1.1.2.1. Powder coat		
1.1.2.1.1. For each type of exposed finish required, prepared on 6-inch square samples of metal of same thickness and material indicated for the work.	YES	NO
1.1.2.2. Wood:		
1.1.2.2.1. Minimum 8 inches square with lumber edge on veneer panel with finish applied.	YES	NO
1.2. Quality Assurance		
1.2.1. Fabricator Qualifications:		
1.2.1.1. Awarded contractor shall be experienced in producing furniture similar to that indicated for this project and with a record of successful in-service performance, as well as sufficient production capacity to produce required units.	YES	NO
1.2.2. Woodwork Quality Standard		
1.2.2.1. Unless otherwise indicated, awarded contractor shall comply with Architectural Woodwork Quality Standards (AWIs) for grades of interior architectural woodwork indicated for construction, finishes, installation, and other requirements.	YES	NO
1.2.3. Powder-Coating Applicator Qualifications		
1.2.3.1. Awarded contractor shall be experienced in successfully applying powder coatings of type indicated to metals of types indicated and employing competent control personnel to conduct continuing, effective quality-control program to ensure compliance with requirements.	YES	NO
1.2.4. Welding: Qualify procedures and personnel according to the following:		
1.2.4.1. AWS D1.1, “Structural Welding Code – Steel.”	YES	NO
1.2.4.2. AWS D1.3, “Structural Welding Code – Sheet Steel.”	YES	NO
1.2.5. Delivery, Storage and Handling		
1.2.5.1. Protect finished surfaces during handling and installation with protective covering of polyethylene film or other suitable material.	YES	NO
2. Products		
2.1. Sheet Metal		
2.1.1. Provide sheet metal without pitting, seam marks, roller marks, stains, discolorations, or other imperfections where exposed to view on finished units.	YES	NO
2.1.2. Steel Sheet		
2.1.2.1. Uncoated, cold-rolled, ASTM A 1008/A 1008/M, commercial steel, Type B, exposed.	YES	NO
2.1.2.1.1. Thickness	YES	NO
2.1.2.1.1.1. 0.747 inch (14 gauge) for exposed surfaces; as required for structural adequacy elsewhere but not less than 0.0598 inch (16 gauge).	YES	NO
2.2. Wood Work Materials		

VENDOR NAME: _____

2.2.1. Lumber		
2.2.1.1. Species and Cut: Red oak, plain sawn.	YES	NO
2.2.1.2. Comply with applicable requirements of AWI Section 100.	YES	NO
2.2.1.3. Moisture content at time of fabrication: not greater than optimum moisture content as specified in woodworking standard.	YES	NO
2.2.1.4. Provide lumber dressed on all exposed faces, unless otherwise indicated.	YES	NO
2.2.1.5. Do not use twisted, warped, bowed, or otherwise defective lumber.	YES	NO
2.2.1.6. Sizes indicated are nominal, unless otherwise indicated.	YES	NO
2.2.1.7. Do not mark or color lumber, except where such marking will be concealed in finish work.	YES	NO
2.3. Power & Data Components		
2.3.1. Grommets: Doug Mockett Power and Communications large oval grommet – PCS3	YES	NO
2.3.2. Color: Matte black	YES	NO
2.4. Miscellaneous Materials		
2.4.1. Filler metal and electrodes	YES	NO
2.4.1.1. Provide type and alloy of filler metal and electrodes as recommended by producer of metal to be welded or brazed and as necessary for strength, corrosion resistance, and compatibility in fabricated items.	YES	NO
2.4.2. Wood Filler for Transparent Finish Woodwork	YES	NO
2.4.2.1. Match final finish color.	YES	NO
2.4.3. Fasteners		
2.4.3.1. Use fasteners fabricated from same basic metal and alloy as fastened metal, unless otherwise indicated.	YES	NO
2.4.3.2. Do not use metals that are corrosive or incompatible with materials joined.	YES	NO
2.4.3.2.1. Provide concealed fasteners for interconnecting ornamental formed-metal items and for attaching them to other work, unless exposed fasteners are unavoidable or are the standard fastening method.	YES	NO
2.4.3.2.2. Exposed Fasteners: Stainless steel; one of the following	YES	NO
2.4.3.2.2.1. Pinned Torx drive, socket-head cap screws or Spanner drive, flat head screws.	YES	NO
2.4.4. Structural Anchors		
2.4.4.1. For application indicated to comply with certain design loads, provide chemical or torque-controlled expansion anchors fabricated from corrosion-resistant materials with capability to sustain, without failure, a load equal to six times the load imposed when installed in unit masonry and equal to four times the load imposed when installed in concrete, as determine by testing per ASTM E 488 conducted by a qualified independent testing agency.	YES	NO
2.4.5. Nonstructural Anchors		
2.4.5.1. For applications not indicated to comply with design loads, provide metal expansion sleeve anchors of type, size, and material necessary for type of load and installation indicated, as recommended by manufacturer, unless otherwise indicated.	YES	NO
2.4.5.2. Use nonferrous-metal or hot-dip galvanized anchors for exterior installations and elsewhere as needed for corrosion resistance.	YES	NO
2.5. Metal Fabrication		
2.5.1. Shop Assembly: Pre-assemble ornamental formed-metal items in shop to greatest extend possible to minimize field splicing and assembly.	YES	NO
2.5.1.1. Disassemble units only as necessary for shipping and handling limitation.	YES	NO
2.5.1.2. Clearly mark units for reassembly and coordinated installation.	YES	NO
2.5.2. Coordinate dimensions and attachment methods of ornamental formed-metal items with those of adjoining construction to produce integrated assemblies with closely fitting joints and with edges and surfaces aligned, unless otherwise indicated.	YES	NO
2.5.3. Form metal to profiles indicated, in maximum lengths to minimize joints.	YES	NO
2.5.3.1. Produce flat, flush surfaces without cracking or grain separation at bends.	YES	NO
2.5.3.2. Fold back exposed edges of unsupported sheet metal to form a ½-inch wide hem on the concealed side, or ease edges to a radius of approximately 1/32-inch and support with concealed stiffeners.	YES	NO
2.5.4. Increase metal thickness or reinforce with concealed stiffeners, backing materials, or both, as needed to provide surface flatness equivalent to stretcher-leveled standard of flatness and sufficient strength for indicated use.	YES	NO

VENDOR NAME: _____

2.5.4.1. Support joints with concealed stiffeners as needed to hold exposed faces of adjoining sheets in flush alignment.	YES	NO
2.5.5. Build in straps, plates, and brackets as needed to support and anchor fabricated items to adjoining construction.	YES	NO
2.5.5.1. Reinforce ornamental formed-metal items as needed to attach and support other construction.	YES	NO
2.5.6. Provide support framing, mounting and attachment clips, splice sleeves, fasteners, and accessories needed to install ornamental formed-mental items.	YES	NO
2.5.7. Where welding or brazing is indicated, weld or braze joints and seams continuously.	YES	NO
2.5.7.1. Grind, fill and dress to produce smooth, flush, exposed surfaces in which joints are not visible after finishing is completed.	YES	NO
2.6. Woodwork Fabrication		
2.6.1. General		
2.6.1.1. Complete fabrication to maximum extend possible before shipment to project site.	YES	NO
2.6.1.2. Where necessary for fitting at site, provide allowance for scribing, trimming and fitting.	YES	NO
2.6.1.2.1. Interior Woodwork Grade: AWI Premium. Sections 100, 200, and 400	YES	NO
2.6.2. Tables Tops		
2.6.2.1. Fabricate of 5/4 (nominal) glued up boards, splined or tongue-and-groove edges, random lengths.	YES	NO
2.6.2.2. Plane to 1-inch thickness.	YES	NO
2.6.3. Fabricate end panels of solid lumber with mortise and tenon joints.	YES	NO
2.7. Metal Finish		
2.7.1. Comply with NAAMM's "Metal Finishes Manual for Architectural and Metal Products" for recommendations for applying and designating finishes.	YES	NO
2.8. Appearance of Finished Work:		
2.8.1.1. Variations in appearance of abutting or adjacent pieces are acceptable if they are within one-half of the range of approved samples. Noticeable variations in the same piece are not acceptable. Variations in appearance of other components are acceptable if they are within the range of approved samples and are assembled or installed to minimize contrast.	YES	NO
2.8.2. Surface Preparation:		
2.8.2.1. Clean surfaces to comply with SSPC-SP 1, "Solvent Cleaning", to remove dirt, oil, grease, or other contaminents that could impair paint bond.	YES	NO
2.8.2.2. Remove mill scale and rust, if present, from undercoated steel, complying with SSPC-SP 5/NACE No. 1, "White Metal Blast Cleaning," or SSPC-SP 8, "Pickling"	YES	NO
2.8.3. Pretreatment		
2.8.3.1. Immediately after cleaning, apply a conversion coating of type suited to organic coating applied over it.	YES	NO
2.8.4. Powder-Coat Finish:		
2.8.4.1. Immediately after cleaning and pretreating, apply manufacturer's standard thermosetting polyester-epoxy hybrid powder coating with cured-film thickness not less than 1.5 mils.	YES	NO
2.8.4.2. Prepare, treat, and coat metal to comply with powder coat manufacturer's written instructions.	YES	NO
2.8.4.3. Color & Gloss:	YES	NO
2.8.4.3.1. Match Tiger Drylac 09/71190, RAL 7021 "Matte Black"	YES	NO
2.9. Woodwork Finishing		
2.9.1. General		
2.9.1.1. Finish woodwork at fabrication shop.	YES	NO
2.9.2. Shop finish in accordance with AWI Finish system Catalyzed Polyurethane "Premium Grade", in accordance with AWI Section 1500.	YES	NO
2.9.2.1. UV-cured polyester or urethane finishes are acceptable.	YES	NO
2.9.2.2. Finish exposed and semi-exposed surfaces the same.	YES	NO
3. Execution		
3.1. Examination		
3.1.1. Examine substrates, areas, and condition, with Installer present, for compliance with requirements for installation tolerances and other conditions affecting performance of computer tables.	YES	NO
3.2. Adjusting		
3.2.1. Return items that cannot be refinished in the field to the shop; make required alterations and finish entire unit or provide new units.	YES	NO

VENDOR NAME: _____

3.3. Protection		
3.3.1. Protect finishes of ornamental formed-metal items from damage during construction period.	YES	NO
4. First Table		
4.1. Awarded contractor shall construct the first table and obtain approval on the design before other tables are constructed. The Aviation Department's designee shall have final approval authority for all design and contract decisions. The City shall not pay for tables constructed before the first table has been approved.	YES	NO
5. Warranty		
5.1. Twelve- (12-) month labor and materials warranty on entire table, not including normal wear and tear of furniture.	YES	NO
6. Attachment A Drawings		
6.1. ASCG Incorporated produced the drawings in Attachment A for sit-down computer tables and stand-up computer tables. Bidders shall provide pricing for both types of tables on Page 4 (Pricing Detail Form) of this solicitation.		
6.2. Tables shall meet the dimensions and specifications in Attachment A, in addition to the specifications stated above.	YES	NO
7. Payments		
7.1. After the first table has been delivered and approved by the Department, the Contractor shall be pre-paid fifty percent (50%) of the total bid amount. When the contract has been completed the additional 50% shall be paid the Contractor. It is the responsibility of the Contractor to submit appropriate invoices to the Department for payment.	YES	NO
7.2. Upon receipt of adequate documentation of third party contracts for services or materials purchased for the tables to be provided to the City, the Contractor shall be paid the amount of such expenditures up to a total of 50% of the total amount bid. If this contract is terminated before the work is completed, the City shall have the option to keep the work in progress or obtain a full refund of such amounts paid in advance. The remainder of the total amount bid shall be paid to the Contractor upon completion and acceptance of the work by the City. Payments shall be made following receipt by the City of properly documented invoices for payment as determined by the budgetary and fiscal guidelines of the City and on the condition that the Contractor has accomplished the work to the satisfaction of the City.	YES	NO

OPTIONS

Include the cost of installation for each table per the below specifications. This cost will not considered in the evaluations of the submitted bids. Listed installation price shall include sales tax.

DESCRIPTION	PRICE *(quantity 1 ea.)*	MEETS SPECIFICATIONS *(circle appropriate answer)*	
A. Installation: • Locate and place ornamental computer tables level and plumb and in alignment with adjacent construction. Location of the tables shall be upon approval by the Aviation Department's designee. • Use concealed anchorages where possible. • Form tight joints and exposed connections accurately fitted together. • Defer only final touchup, cleaning, and polishing until after installation. • Proceed with installation only after unsatisfactory conditions have been corrected. • Restore finishes damaged during installation and construction period so not evidence remains of correction work. • Remove temporary protective coverings at time of Substantial Completion.	$ _____	YES	NO

ADDITIONAL OPTIONS:
Complete below for additional options; attach additional page(s) for additional offered options

DESCRIPTION	MODEL	PRICE *(quantity 1 ea.)*
B.		$
C.		$
D.		

VENDOR NAME: _____

1. Supplemental Terms & Conditions: These supplemental terms and conditions are in addition to the general instructions, terms and conditions and, in the event there is a conflict between the provisions of the general instructions, terms and conditions and these supplemental terms and conditions, the provisions of these supplemental terms and conditions shall control.

2. Award of Contract – All or None: It is the City's intention to award a contract resulting from this request to the responsive and responsible Offeror whose "All or None" total price is lowest. If no responsive "All or None" offers are received, the City may award to the lowest responsive and responsible Offeror who offers at least as many items as all other Offerors.

3. Award of Contract – Lowest Responsible Offer: A contract resulting from this request will be awarded on the basis of the lowest per item offer judged responsive and acceptable by the City.

4. Cited Model: The model (s) cited herein is (are) intended only as a reference; however any model offered must meet or exceed all specifications of the cited model(s) by virtue of performance and/or physical specifications.

5. Design Conformance – OSHA: The design of all equipment purchased as a result of an offer made in response to the request shall be in conformance with all applicable regulations of the Federal Occupational Safety & Health Act which are in effect at the time of delivery.

6. Estimated Quantities, Not An Order: The estimated quantities listed do not constitute an order and are not necessarily comprehensive; they are a representative sample of what is likely to be purchased during the course of a contract resulting from this request and will be used only to evaluate offers and award such a contract. These quantities as stated may increase or decrease depending on the actual needs of the City. Actual orders will be placed by the user.

7. All pricing offered in response to this RFB shall be based upon FOB Albuquerque, NM. Other Political Entities must negotiate transportation/costs with the seller(s).

8. Freight, as Indicated: F.O.B. point other than indicated by the City will not be acceptable.

9. Freight, Prepaid: Freight will be F.O.B. destination – freight prepaid. F.O.B. point other than indicated by the City will not be acceptable.

10. Guaranteed Performance: The Offeror, if awarded a contract as a result of this request, guarantees that the materials supplied are capable of the performance required in the specifications in this request, and agrees to make such changes, adjustments or replacements as are immediately necessary in order for the materials to meet the purchasing requirements at no cost to the City. If defects or specification failures are discovered, the Purchasing Officer shall have the right, notwithstanding acceptance and payment, to require the unit/item to be properly furnished in accordance with the specifications and drawings at the cost and expense of the Offeror of the Offeror's surety.

11. Inspection of Materials: The City reserves the right to inspect materials provided by the Offeror through a contract resulting from this request to determine their quality, fitness and suitability. Inspection of these materials may be conducted whenever the City considers necessary.

12. Laws & Regulations: The Offeror shall give all notices and comply with all laws, ordinances, rules and regulations that apply to this work. The Offeror shall obtain and pay for all permits and licenses necessary to execute and complete the work. All required licenses must be in force at the time of submission of an offer and remain in force during the entire period of any contract resulting from this request. Failure to provide proof of required licenses in force will result in the offer being judged non-responsive.

13. Materials and Workmanship: All materials furnished by the Offeror shall be free from defects and imperfections. Workmanship shall be in accord with the best industry standards and practices. Bother materials and workmanship shall be subject to the approval of the City.

14. Other Public Governmental Agencies (hereinafter, OPGA) may purchase from any Request for Bid (RFB) issued by the City unless otherwise stated. It shall further be understood that when the terms "City of Albuquerque" or "the City" are used, that OPGA also applies, unless otherwise stated. It shall be the responsibility of the vendor to verify whether the purchasing entity is legitimate.

CITY OF ALBUQUERQUE

GENERAL INSTRUCTIONS, TERMS, AND CONDITIONS

IMPORTANT: READ CAREFULLY BEFORE SUBMITTING OFFERS, FAILURE TO DO SO SHALL NOT ABSOLVE THE OFFEROR FROM RESPONSIBILITY TO PERFORM OR DELIVER AS SPECIFIED.

1. Applicability: Except as otherwise specifically provided in the Request, these General Instructions, Terms, and Conditions shall govern the procurement of the items specified in this Request. In the event of a conflict between these General Instructions, Terms, and Conditions, Supplemental Conditions or the specifications of this bid, the order of applications shall be the Specifications, Supplemental Conditions, and the General Instructions, Terms and Conditions. In addition, the Public Purchases Ordinances (Section 5-5-1 ***et seq***. **ROA** 1994) and promulgated Rules and Regulations shall apply.

2. Definitions: As used in this request, the definitions of the Public Purchases Ordinances (Section 5-5-2 ROA 1994) apply including the following:

   A. "City" means the City of Albuquerque, New Mexico.

   B. "Contract" means any agreement for the procurement of goods, services, construction or concessions. A purchase order issued in response to an offer constitutes a contract.

   C. "Contractor" means an Offeror who has been awarded a contract.

   D. "Offeror" means a business that submits a response to a competitive solicitation.

   E. "Purchase Order" means a document issued by the Purchasing Office directing the Contractor to deliver goods, services or construction.

   F. "Purchasing Office" means the Purchasing Division of the Department of Finance & Administrative Services of the City.

   G. "Purchasing Officer" means the person charged with the responsibility of administering the Purchasing Office.

   H. "Request" means all documents, including those attached or incorporated by reference, issued by the Purchasing Office for soliciting offers to provide goods, services, or construction.

   I. "Responsible Offeror" means a business which has the capability in all respects to perform fully the contract requirements set out in the competitive solicitation, and the integrity and reliability which will assure good faith performance, and who has not violated or attempted to violate any provision of law or ethical conduct. Factors which may be considered in determining the Offeror's capability to perform, among others, are its financial resources, production or service facilities, service reputation and experience.

   J. "Responsive Offer" means a written offer to furnish goods, services, or construction in conformity with standards, specifications, delivery terms and conditions, and all other requirements established in a competitive solicitation.

3. Preparation of Offer:

   A. Submission: All offers must be submitted on the Request for Bid Form enclosed. Failure to do so may disqualify your offer. It is the responsibility of the Offeror to submit sufficient additional information to allow for a thorough evaluation of the offer submitted.

   B. Preparation Method: All information required in the Request must be typewritten or handwritten in ink and must be legible. Erasures or other changes must be initiated by the person signing the offer. Each offer must be signed on the appropriate pages by an individual authorized to bind the Offeror submitting the offer.

   C. Unit Prices: The unit prices for each item offered shall be shown unless otherwise specified. In the case of a discrepancy between the unit price and the extended price, the unit price will govern in determining the price used for evaluation.

      Unit prices offered should be for the units specified.

   D. Delivery Time: Delivery time stated in the specifications shall apply. Deviations by the Offeror shall be stated on the Exception Form. Time, if stated in number of days, will be consecutive calendar days.

   E. Payment Terms: The Request for Bid Form provides space for the Offeror to identify the payment terms that the Offeror is offering. Terms of less than twenty (20) days will not be considered. The discount term shall not begin until the goods, services or construction have been delivered and accepted and the correct invoice received in the City's Accounts Payable Office.

      Prompt payment discounts will NOT be used as a factor in determining the lowest responsive offer.

   F. Freight Policy: Freight will be F.O.B. Destination (as indicated on the Request Form), Freight Prepaid, unless otherwise specified in this Request.

G. Taxes: Offerors shall include any applicable gross receipts taxes in it offered price, unless specified otherwise in this request, and such offer will be construed in that manner. The City will, under appropriate circumstances, furnish a non-taxable transaction certificate. Determination of whether the tax is due and payment of the tax is the responsibility of the Offeror. Applicable taxes are to be included in each invoice due and may not be billed more than sixty (60) days after providing the services to which the taxes apply.

H. New Material, Etc.: All materials, supplies, equipment, and vehicles specified in this Request shall be new, the latest in production and manufactured within the last twelve (12) months (computed from the date and time of offer opening) unless otherwise indicated. This does not apply to materials, supplies, equipment or vehicles used by the Contractor to provide the required items of tangible personal property, services or construction.

I. Warranty: Materials furnished by the successful Offeror shall be accompanied by the manufacturer's written warranty against defects in quality, craftsmanship, and materials.

The Offeror agrees that the items of tangible personal property, services or construction furnished under any contract resulting from this Request shall be covered by the most favorable commercial warranties the Offeror gives to any customer for such items. Further, the Offeror agrees that the rights and remedies provided in such warranties extend to the City and are in addition to and do not limit any rights afforded to the City by any other clause of this Request. The Offeror agrees not to disclaim warranties of fitness for a particular purpose of merchantability. Warranties shall become effective at the time of acceptance.

J. Equivalent Offers: Where a product is characteristic of a sole manufacturer, or where a brand name is indicated in the specifications, it shall be defined to mean minimum acceptable level or minimum quality required by the City unless the specifications state that no substitutes or equivalents will be allowed. If the Offeror offers an item other than the one specified, which the Offeror considers comparable, the manufacturer's name and model number of that item must be specified in the offer and sufficient performance specification and descriptive data provided to permit a thorough evaluation. Failure to provide the appropriate information may result in disqualification of the offer.

K. Exceptions to Specifications: Offerors are to state any exceptions taken to the Request on the Specifications Exception Form. If no exceptions are stated, the Offeror is required to furnish the items exactly as specified and to comply with all other requirements of this Request.

L. Indemnity: The Offeror to whom an award has been made as a result of this Request expressly agrees to defend, indemnify and save harmless the City and its officers, agents and employees from and against any and all claims, suits demands, actions, or proceedings of every nature and description brought because of any injury or damage received or sustained by any person, persons, or property arising out of the Offeror's providing the goods, services or construction pursuant to the offer or by reason of any act or omission, neglect or misconduct of the Offeror, the agents, employees or subcontractors of the Offeror or the agents or employees of any subcontractor of the Offeror. The indemnity required herein shall not be limited by reason of the specification of any particular insurance coverage.

M. Patent Indemnity: It any item furnished pursuant to any contract resulting from this Request shall be covered by any patent, copyright, or application for patent or copyright, the Offeror shall defend, indemnify and save harmless the City from any and all loss, cost or expense or any all claims suits, or judgments as a result of the use of such item in violation of rights under such patent, copyright, or application for patent or copyright.

N. Public Inspection: Each offer shall be open to public inspection, except to the extent the Offeror designates trade secrets or other proprietary data to be confidential. Material so designated shall accompany the offer and each page shall be clearly marked and readily separable from the offer in order to facilitate public inspection of the nonconfidential portion of the offer. Prices and makes and models or catalog numbers of the items offered, deliveries and terms of payment shall be publicly available at the time of the opening of the offer regardless of any designation to the contrary. The City shall endeavor to restrict distribution of the material designated as confidential to only those individuals involved in the review and analysis of the offers. Offerors are cautioned that materials designated confidential may nevertheless be subject to disclosure to any New Mexico citizen under the Inspection of Public Records Act (Sections 14-2-1 through 14-2-3 N.M.S.A 1978).

O. Material Safety Data Sheets: To comply with the Occupational Health and Safety Regulation 1910.1200 for general standards on handling hazardous materials safety data sheets may be required for all or part of the products included on the Request. It is the responsibility of the Offeror to make this determination and, if required, a copy of the MSDS must accompany the product when delivered to the end user. Failure to comply with this requirement may cause the delivery of products to be rejected and all costs related to such action to be borne by the Offeror.

P. License and Certifications: The Offeror must provide proof, in a manner acceptable and within the time period specified by the Purchasing Office, but prior to award, unless otherwise specified in this Request, that they are licensed and certified by the appropriate agencies as required by law to perform the services or provide the goods specified in this Request.

4. Debarment or Ineligibility Compliance: By submitting its offer in response to this Request, the Offeror certifies that (i) it has not been debarred or otherwise found ineligible to receive funds by any agency of the federal government, the State of New Mexico, any local public body of the State, or any state of the United States, and (ii) should any notice of debarment suspension, ineligibility or exclusion be received by the Offeror, the Offeror will notify the City immediately.

5. Ethical Conduct: By submitting its offer in response to this Request, the Offeror certifies that:

A. It has not offered, given or agreed to give to any City employee or former employee, a gratuity or offer of employment to influence the preparation of or recommendation of award of this Request;

B. It has not retained a person to solicit or secure a City Contract for a contingent fee;

C. It has not taken any action in restraint of free competitive bidding in connection with this Request;

D. It has not in any way violated the ethical conduct or other provisions of the City's Public Purchases Ordinance; and

E. It currently has no interest and shall not acquire any interest, direct or indirect, which would conflict in any manner or degree with its performance of any contract resulting from this Request.

6. Requests for Explanations by Offerors:

A. Requests for Explanation: Any explanation desired by the Offeror regarding the meaning or interpretation of specifications or any part of this Request must be required in writing and received in the Purchasing Office not less then ten (10) working days before the offer opening date.

B. Responses to Requests: Oral explanations or instructions given prior to the opening of the offer shall not be binding, Any official explanations must be issued, in writing, by the Purchasing Division.

7. Addenda:

Addenda: Changes or amendments to specifications, conditions or provisions herein may be initiated ONLY through the Purchasing Office in the form of a written addendum.

Any addenda shall become a part of this Request and should be acknowledged either by being signed and returned with the offer or through letter or telegram that arrives prior to the opening of the offer.

Failure to do so may result in disqualification of the offer.

It is the responsibility of all vendors considering making an offer in response to this Request to ensure that they have received all addenda prior to making an offer. Offerors may contact the Purchasing Division to obtain information regarding any addenda issued. Failure to obtain an addendum shall not be grounds for overturning a recommendation of award.

8. Clarification of Offers:

The City may, in the evaluation of offers, request clarification from Offerors regarding their offers, obtain additional material or literature, and pursue other avenues of research as necessary to insure that a thorough evaluation is conducted.

9. Submissions of Offer:

A. Time: Offers not received by the time and date indicated on the Request will not be accepted.

B. Hand Carried: Offers may be hand carried to the City Clerk's Office on the eleventh (11th) floor of the Albuquerque/Bernalillo County Government Center, 1 Civic Plaza, Albuquerque, New Mexico.

C. Mailed: Offers may be mailed to the Attention of the City Clerk, City of Albuquerque, P.O. Box 1293, Albuquerque, New Mexico, 87103. The City shall not be responsible for offers that are mailed and not received by the opening date and time specified in the solicitation.

Note: The City picks up mail at the post office once every morning at 7:00 AM (local time). ALL SEALED BIDS MUST BE RECEIVED BY THE OFFICE OF THE CITY CLERK BY EXACTLY 1:30 PM, LOCAL TIME AS RECORDED IN THE CITY CLERK'S OFFICE.

D. Receipts: Receipts for hand delivered offers shall be issued by the City Clerk's Office (upon request) for offers which are hand carried.

E. Envelope Preparation: The envelope / package containing an offer must be sealed and the following identifying information legibly written or typed on the outside:

1) Name of Offeror
2) Request Number assigned by the City to the Request
3) Opening date as identified on the Request or subsequent addenda

F. No Other Methods of Offer Delivery: Neither telephone, telegraphic, or facsimile Offer shall be accepted.

10. Civil Rights Compliance:

Offeror certifies and agrees, by submittal of its offer, to comply and act in accordance with all provisions of the Albuquerque Human Rights Ordinance, the New Mexico Human Rights Act, Title VII of the U.S. Civil Rights Act of 1964, as amended, and all federal statutes and executive orders, New Mexico statutes and City of Albuquerque ordinances relating to the enforcement of civil rights.

Offeror additionally certifies and agrees to abide by and cooperate in the implementation of the policies and practices set forth in the City's Affirmative Action Plan.

Questions regarding civic rights or affirmative action compliance requirements should be directed to the City of Albuquerque Human Rights Division, Community Services Department.

11. Americans with Disabilities Act Compliance:

Offeror certifies and agrees, by submittal of its offer, to comply and act in accordance with all applicable provisions of the Americans with Disabilities Act of 1990 and Federal regulations promulgated thereunder.

12. Withdrawal of Offers:

An offer may be withdrawn in person at any time BEFORE the scheduled opening of offers, provided a receipt for the withdrawn offer is signed by the Offeror or the Offeror's authorized representative. The City reserves the right to request proof of authorization to withdraw an offer.

13. Opening of Offers:

Time and Place: Offers will be opened by the City Clerk at the time and place identified in this Request. Openings are open to the public. Offerors are encouraged to attend.

14. Disqualification of Offer:

A. Any offer received from an Offeror that is, at the time of submitting its offer or prior to receipt of award of a contract, debarred by or otherwise ineligible to receive funds from any agency of the federal government, the State of New Mexico, any local public body of the State, or any state of the United States, shall be rejected.

B. In addition, the City reserves the right to reject an offer for, including but not limited to, any one or more of the following circumstances:

C. In the past the Offeror has failed to comply with previous contractual commitments or offers to the City.

D. In the opinion of the City, the offered prices are higher than the prices for which the specified items or services can be purchased on the open market.

E. The Offeror failed to properly fill in any space on the Request Form and attached documents where information or a signature is required.

F. The Offeror did not, at the time the offer is made, have an appropriate New Mexico Contractor's License or Certification when one is required by law, regulation or this Request.

G. The Offeror failed to submit with their offer, bid bonds or other material requirements of the Request or has otherwise submitted a non-responsive offer.

H. There are unauthorized additions, conditions, alternate proposals or other irregularities of any kind which might make the offer incomplete, indefinite or ambiguous in meaning.

I. Offer was not submitted in ink or typewritten or there is any erasure or alternation of words or figures relating to pricing which is not initialed in ink by the Offeror.

J. The City determines that an offer contains any misrepresentations whatsoever.

15. Rejection/ Cancellation of Offers:

Any solicitation, prior to opening or after opening, may be cancelled or any or all offers may be rejected in whole or in part when it is in the best interest of the City.

16. Minor or Technical Irregularities:

Minor or technical irregularities in an offer, when there is no effect on price, quality or quantity may be waived and clerical errors in an offer may be corrected, if permitted by the Purchasing Officer and are in the best interest of the City.

17. Nonconforming/ Conditional, or Counter Offers:

An offer which is nonconforming or conditional, whether in part or in whole, will be rejected.

18. Offer Analysis:

The City reserves the right to analyze, examine and interpret any offer for a minimum period of ninety (90) consecutive calendar days, after the scheduled time for the opening of offers. Offers may not be rescinded during this period except for good cause and with the written approval of the Purchasing Officer. In those situations where the analysis / evaluation exceeds the ninety (90) calendar days, Offerors may withdraw their offers from consideration.

19. Award of Contract:

A. When Award Occurs: The award of a contract occurs when a Purchase Order is issued or other evidence of acceptance by the City is provided to the Offeror. A Recommendation of Award does not constitute award of contract.

B. Award: If a contract is awarded, it shall be awarded to the responsive and responsible Offeror whose offer is lowest in total price and is the most advantageous to the City, specifications and other factors considered.

C. Basis of Award: The City reserves the right to award a contract based on this Request in total or by group of items, on the basis of individual items, or any combination of these, which in the judgment of the Purchasing Officer, best services the interests of the City, unless otherwise stated in this Request.

D. Increase of Quantities: The City reserves the right to increase the quantities of items of tangible personal property, services or construction to be provided within a twelve (12) month period, under the terms of the Contract, at the same prices, with the consent of the Contractor.

E. Decrease of Quantities: The City reserves the right to decrease the quantities of items of tangible personal property, services or construction to be provided under the terms of the Contract. However, the Contractor shall be offered an opportunity to cancel the portion of the Contract affected by such a decrease if the Contractor is not able to meet the contracted prices by delivering the decreased amount. This clause shall not have effect if the Contract was originally awarded based on estimated quantities.

F. Contract Changes: In no case shall a contract be changed without the prior written approval of the Purchasing Officer.

G. Debarment / Cancellation of Contract: Upon receipt of notice of debarment of an Offeror awarded a contract as a result of this Request for Bids (the "Contractor"), or other ineligibility of the Contractor to receive funds from any agency of the federal government, the State of New Mexico, any local public body of the State, or any state of the United States, the City shall have the right to cancel the contract with the Contractor for cause as provided in Section 25 below.

H. Local and Resident Preferences: A five percent (5%) Preference may be afforded an Offeror who qualifies in accordance with the City's Public Purchases Ordinance. If no offers are received which qualify for a Local Preference, a 5% Resident Business Preference may be afforded an Offeror who has been certified by the State of New Mexico Purchasing Division, in compliance with State laws.

Information regarding the Public Purchases Ordinance and the application of the Local or Resident preference can be obtained by contacting the Purchasing Division at (505) 768-3344.

For consideration for the Local Preference the Offeror must complete the Local Preference Certification Form in accordance with the form instructions and return the Local Preference Certification Form with its offer.

To qualify for the Resident Preference, the Offeror must provide its assigned Resident Certification Number with its offer (an appropriate place is designated in the Request). If an Offeror does not provide its assigned Resident Certification Number with its offer, the offer shall not be considered as made by a resident business and no preference shall be applied during the analysis of that offer.

NOTE: Your State Tax Number is NOT your Resident Certification Number.

20. Goods Produced Under Decent Working Conditions:

It is the policy of the City not to purchase, lease, or rent goods, for use or for resale at City-owned enterprises that were produced under sweatshop conditions. The Offeror certifies, by submittal of its offer in response to this solicitation, that the goods offered to the City were produced under decent working conditions. The City defines under decent working conditions as production in a factory in which child labor and forced labor are not employed; in which adequate wages and benefits are paid to workers; in which workers are not required to work more than 48 hours per week (or less if a shorter workweek applies); in which employees are free from physical, sexual or verbal harassment, and in which employees can speak freely about working conditions and can participate in and form unions. [***Council Bill NO. M-8 Enactment No. 9-1998***]

21. Protest Process:

A. Request Documents: Protests concerning the specifications of this Request or other matters relating to the solicitation documents must be received by the Purchasing Officer no later than ten days prior to the deadline set for the receipts of offers.

B. Recommendation of Award: Protests concerning other matters relating to this Request must be filed with the Purchasing Officer not later than 5:00 p.m. of the date stipulated in the Recommendation of Award.

C. Timely Protests: Protests must be received by the Purchasing Officer prior to the appropriate deadline as set out in A. and B. of this Section or they will not be considered valid. The Purchasing Officer may waive the deadline for good cause, including a delay caused by the fault of the City. Late delivery by the U.S. Postal Service or other carrier shall not be considered good cause.

D. Required Information from Offeror: All protests must be submitted in written form and must be legible. Facsimile, telephone or telegraphic protests will not be accepted. Protests shall contain at a minimum the following:

1) Name and address of the protesting party
2) The solicitation / Request Number
3) A clear statement of the reason(s) for the protest
4) Details concerning the facts which support the protest
5) Attachments of any written evidence to substantiate the claims of the protest
6) Statement specifying the ruling requested

E. Protest Hearing: If a hearing is requested, the request must be included in the protest and received within the time limit to be allowed. The filing fee of twenty dollars ($20.00) must accompany the request for hearing. The grant of a hearing shall be at the discretion of the Purchasing Officer following review of the protest.

F. Delivery of Protest: Protests may be hand-delivered. Protests which are mailed should be addressed as follows:

Purchasing Officer
City of Albuquerque
Purchasing Division
P.O. Box 1293
Albuquerque, NM 87103

Envelope should also clearly indicate “PROTEST” and the solicitation number.

G. Purchasing Officer Action: The Purchasing Officer will, after evaluation of a protest, issue a response. Only issues outlined in the written protest will be considered by the Purchasing Officer or may be raised at a protest hearing.

22. Delivery, Acceptance and Guarantee:

A. No Delivery Before Purchase Order is Issued; No Offeror, including the Offeror to whom an award is made shall deliver any item of tangible personal property, commence services or construction prior to the issuance of a Purchase Order or Notice to Proceed issued by the City Purchasing Division.

B. Cancellation for Non-Delivery: The City reserves the right to cancel any order not delivered by a guaranteed date stipulated in any contract resulting from this Request without liability on the City’s part.

C. Acceptance of Delivery: Acceptance by the City of any delivery shall not relieve the Contractor of any guarantee or warranty, expressed or implied. Such acceptance of delivery shall not be considered an acceptance of services or materials not in accordance with the specifications. Such acceptance of delivery shall not waive the City’s right to require replacement of defective material or inadequate service.

23. Inspections:

Prior to Acceptance of Delivery: All items of tangible personal property, services or construction found inferior to the quality specified in the Request, deficient or incorrect in weight, measurement, workmanship, handicraft or otherwise, may be rejected as a whole or in part and then shall be removed by the Contractor at the Contractor’s own risk and expense promptly after notice of rejection. The Contractor shall assume responsibility for taking the necessary action to correct or replace the rejected items, within the time frame specified in the notice of rejection.

24. Invoices and Payments:

The Contractor shall submit an accurate invoice, in duplicate, for each purchase. Invoices shall refer to the Purchase Order Number, the Release Form Number if applicable, and shall be itemized unless otherwise specified in this Request. Invoices are to be mailed to: Accounting Division (Accounts Payable), City of Albuquerque, P.O. Box 1985, Albuquerque, New Mexico 87103. Invoices mailed or provided to any other entity will result in a delay in making payment. Offerors are encouraged to inquire if payments due are not received within thirty (30) days after delivery of goods/services and submittal of invoice by contacting the Accounting Division at (505) 768-3400.

25. Default/Termination for Cause:

If, through any cause, the Contractor fails to fulfill the Contractor’s obligations under any contract resulting from this Request in a timely and proper manner, or if the Contractor, violates any of the covenants, agreements or stipulations of such contract, the City shall notify the Contractor of such violations in writing and allow the Contractor a reasonable time, set out in the notice, to correct the default. If the default is not corrected within the specified time period the City shall have the right to cancel the contract and any or all other current contracts with the Contractor, and, if applicable, to purchase the required goods or services from another source or sources. The City shall provide written notice to the Contractor specifying the effective date of cancellation. The notice of cancellation may be contained in the notice of default.

If a contract resulting from this Request is cancelled, the Contractor shall not be relieved of liability to the City for damages caused by its breach of the contract. The City reserves the right to recover such damages, including but not limited to any excess cost incurred in having to purchase contract goods/services from other sources by a deduction from an unpaid balance due to the Contractor, collection against a performance or labor and materials payment bond, a combination of these remedies, or any other legal method available. In addition, the Contractor may be removed from the Purchasing Office Vendor List or determined to be ineligible to respond to future solicitations, as being not responsible.

26. Termination for the Convenience of the City:

The City may terminate any contract resulting from this Request at any time by giving at least thirty (30) days notice in writing of such termination to the Contractor. In such event, the Contractor shall be paid under the terms of the contract for all goods/services provided to and accepted by the City, if ordered or accepted by the City prior to the effective date of termination.

27. Termination for Lack of Appropriations:

Funding for the contract resulting from this Request has been appropriated by the City Council for the City's current fiscal year. Notwithstanding any other provisions in the contract resulting from this Request, its continuation beyond the end of the/ any fiscal year is contingent on the City Council making the appropriations necessary to fund the contract. If sufficient appropriations are not made the contract may be terminated at the end of the City's then current fiscal year upon written notice given by the City to the Contractor. Such termination shall not constitute a default. All payment obligations of the City and all of its interest in the contract will cease upon date of termination. The City's decision as to whether sufficient appropriations are available shall be accepted by the Contractor and shall be final.

(6/23/2004)

Performance Bond: Upon execution of the contract resulting from this RFB, and prior to performing any work under this agreement, the Contractor shall provide to the City a performance bond guaranteeing performance of the contract in accordance with its terms and conditions. Said bond shall be in an amount equal to one hundred percent (100%) of the bid price, offered as security for the faithful performance of the contract and shall be maintained throughout the term of the contract. The Contractor must be named as principal on the bond.

All bonds must be written by a surety authorized to conduct business in the State of New Mexico and be listed as approved in the current Federal Register listing. The bonds shall be written on the forms provided in this RFB. No third party bonds will accepted. Cashier's checks, certified checks, personal checks, letters of credit, cash or other substitutes will not be accepted in lieu of these bonds.

SAMPLE PERFORMANCE BOND

KNOW ALL MEN BY THESE PRESENTS:

That _____ as Principal, hereinafter called the Contractor, and _____, a corporation duly organized and existing under and by virtue of laws of the State of _____ and authorized to do business in the State of New Mexico, as Surety, hereinafter called the Surety, are held and firmly bound unto the City of Albuquerque, New Mexico, as Obligee, hereinafter called the City, in the mount of _____ for the payment whereof the Contractor and Surety firmly bind themselves, their heirs, executors, administrators, successors and assign, jointly and severally, firmly by these presents.

WHEREAS, the Contractor has submitted a Bid in response to RFB2007-090-SB, entitled "Custom Built Wood & Metal Computer Tables", and shall by written agreement enter unto a contract with the City described as follows: _____, which contract shall by reference be made a part hereof and is hereinafter referred to as the Contract.

NOW, THEREFORE, the condition of this obligation is such that, if the Contractor shall faithfully perform and complete said Contract according to its terms and comply with all requirements of law, then this obligation shall be null and void; otherwise it shall remain in full force and effect.

The Surety hereby waives notice of any alternation or extension of time made by the City.

The Surety hereby consents to progress payments to the Contractor and acknowledges that such payments shall not preclude the City from showing the true character and quality of materials furnished or services rendered or from recovering the Contractor or Surety such damages as the City may sustain by reason of deficiency in quantity or quality of materials or services furnished with respect to which a progress payment was made.

Whenever the Contractor shall be, and is declared by the City to be, in default under the Contract, the City having performed its obligations thereunder; the Surety may promptly remedy the default or shall promptly:

1. Complete the Contract in accordance with its terms and conditions, or

2. Obtain a proposal or proposals for submission to the City for completing the Contract in accordance with its terms and conditions and, upon determination by the City and Surety of the responsive and responsible Offeror, arrange for a contract between such Offeror and the City and make available as the work progresses (even though there should be default or a succession of defaults under the Contract or Contracts of completion arranged under this paragraph) sufficient funds to pay the cost of completion less the balance of the contract price but not exceeding, including other costs and damages for which the Surety may be liable hereunder, the amount set forth in the first paragraph hereof. The term "balance of the contract price", as used in this paragraph shall mean the total amount payable by the City to the Contractor under the Contract and any amendments thereto, less the amount properly paid by the City to the Contractor.

The Surety acknowledges that the Contractor may contain express guarantees and agrees that said guarantees, if any, are covered by the Surety's obligation hereunder.

Any suit under this bond must be instituted before the expiration of three years from the date on which final payment under the Contract falls due, except that, with respect to express guarantees of a longer term, a suit thereon must be initiated within six months following the expiration of said express guarantees, if any.

Right of action with respect to any express guarantees, if any, in the Contract shall accrue following completion and formal acceptance of the work under the Contract.

No right of action shall accrue on this bond to or for the use of any persons or corporation other than the City named herein or its successors or assigns.

Signed and Sealed this _____ day of _____, 2007.

Attest:

Contractor: _____

_____ By: _____

Title: _____

Attest:

_____ Surety: _____

By: _____

Title: _____

Claims or Notice given to Surety pursuant to this Bond shall be sent to the following mailing address:

_____
_____
_____
_____

INSTRUCTIONS FOR
LOCAL PREFERENCE CERTIFICATION FORM

1. **ALL INFORMATION MUST BE PROVIDED**. A 5% local preference is available for this procurement. To qualify for this preference, an Offeror MUST complete and submit this Form with its offer. If an offer is received without the Form attached, completed, signed and certified, or if the Form is received without the required information, the preference will not be applied. The form or a corrected form will not be accepted after the deadline for receipt of bids or proposals.

2. **LOCAL PREFERENCE PRECEDENCE OVER STATE PREFERENCE**. The local preference takes precedence over the State Resident Business Preference and only one of the two preferences will be applied to any one offer. If it is determined that the local preference applies to one or more Offerors in any solicitation, the State Resident Business Preference will not be applied to any offers.

3. **PHYSICAL LOCATION MUST BE STATED**. To qualify for the local preference, a business must have a location in the Albuquerque Metropolitan Area (Abq. Metro Area). The business location inserted on the form must be a physical location, street address or such. Do not use a post office box or other postal address.

4. **ADDITIONAL REQUIREMENT.** To qualify for this preference, the principal Offeror (i.e. the business, not the individual signing the form) if it is a corporation, must be a New Mexico corporation with its articles of incorporation filed with the New Mexico Public Regulation Commission.

5. **DEFINITIONS**. The following definitions apply to this preference:

   - The Abq. Metro Area includes all locations within the City of Albuquerque and Bernalillo County, and within any municipality (i.e. incorporated city, town or village) contiguous to the City of Albuquerque and Bernalillo County.

   - A resident of the Abq. Metro Area is a person who occupies a dwelling in the Area and who manifests an intent to maintain that dwelling on a permanent basis.

   - A principal Offeror is a single Offeror, a business which is the prime contractor or one of the prime contractors and not a subcontractor, or a partner or joint venturer submitting an offer if conjunction with other businesses.

6. **ADDITIONAL DOCUMENTATION**. If requested, a business will be required to provide, within 10 working days of the request, documentation to substantiate the information provided on the form.

LOCAL PREFERENCE CERTIFICATION FORM

RFP/RFB NO: _____

Business Name: _____

Business Location (in Abq. Metro Area): _____

_____

Business Type: SELECT ONE

☐ Corporation – Indicate state of corporation → _____

☐ Partnership – Indicate "general" or "limited" → _____

☐ Sole Proprietorship (Single Owner with employees)

☐ Individual (Single Owner/No employees) → _____

☐ Other – Indicate status → _____

Additional Information: (PROVIDE IF BUSINESS IS A CORPORATION)

Date of incorporation in the State of New Mexico → _____

CERTIFICATIONS

I hereby certify that the business set out above is the principal Offeror submitting this offer or is one of the principal Offerors jointly submitting this offer (e.g. as a partnership, joint venture). I hereby certify that the information which I have provided on this form is true and correct, that I am authorized to sign on behalf of the business set out above and, if requested by the City, will provide, within 10 days of notice, the necessary documents to substantiate the information provided on this form.

Signature or Authorized Individual: _____ ←

Printed Name: _____

Title: _____

Date: _____

YOUR MUST RETURN THIS FORM WITH YOUR OFFER

9/24/02

CITY OF ALBUQUERQUE
Purchasing Division

OFFEROR COMMENTS FORM

Request Number _____

It is requested that Offerors provide any additional information relating to their offer that will assist in the evaluation of such without having to ferret out information concerning the goods and services you intend to provide.

Information pertains to the following (please check applicable box)

- ☐ **Equivalent Product**
- ☐ **Clarification**
- ☐ **Exception(s) to Requirements**
- ☐ **General or Miscellaneous Comments**

If additional space is required, please use reverse side of the form or attach additional document(s).

Name of Offeror	Signature (Authorized Representative)	Date

Attachment A

RFB2007-090-SB

Custom Built Wood & Metal Computer Tables

ALBUQUERQUE INTERNATIONAL SUNPORT
TERMINAL COMPUTER TABLES

2200 SUNPORT BLVD. SE
ALBUQUERQUE, NEW MEXICO 87106

INDEX

A101 COMPUTER TABLES LOCATIO
A102 LOW (SIT-DOWN) COMPUTER
A103 HIGH (STAND-UP) COMPUTER
A104 SPECIFICATIONS

ASCG
INCORPORATED
ENGINEERS · ARCHITECTS · SURVEYORS · PLANNERS
6501 AMERICAS PARKWAY NE, SUITE 400
ALBUQUERQUE, NEW MEXICO 87110-5372
PHONE 505.247.0294 · FAX 505.242.4845

mbbj
223 Yale Ave. North
Seattle, Washington 98109
p(206) 223-5555
f(206) 621-2304

REV.	SHEETS	CITY ENGINEER	DATE	USER DEPARTMENT	DATE

APPROVALS	ENGINEER	DATE
DRC Chairman		
Transportation		
Water/Wastewater		
Hydrology		
Aviation		
Constr. Mngmt.		

City Project No. | Drawing No. | Shee

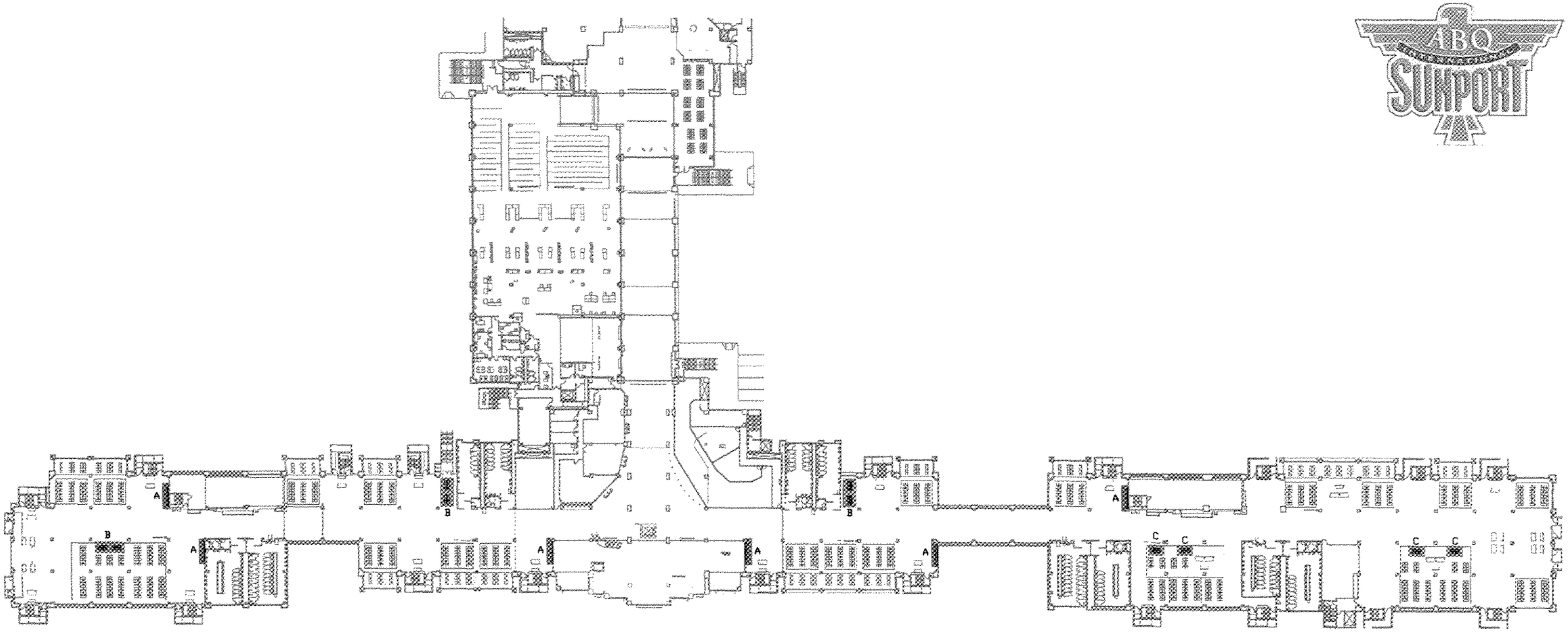

LEGEND:
A- (2)-(8'-0"X18") HIGH (STAND-UP) TABLE: 6 PEOPLE X 6 LOCATIONS = 36 POSITIONS
B- (2)-(8'-0"X33") LOW (SIT-DOWN) TABLE: 12 PEOPLE X 3 LOCATIONS = 36 POSITIONS
C- (1)-(8'-0"X18") LOW (SIT DOWN) TABLE: 6 PEOPLE X 4 LOCATIONS = 24 POSITIONS

96 TOTAL POSITIONS

NOTE:
GATE LOBBY SEATING FOR SOUTHWEST AIRLINES GATES SHOWN AS TYPICAL LAYOUT. FINAL LAYOUT TO BE CONFIRMED PER SOUTHWEST GATE OPERATIONS.

1 A-101/NTS LOCATION PLAN

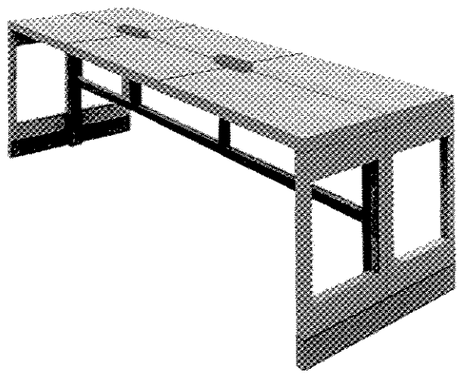

2 A-101/NTS LOW (SEAT-DOWN) TABLE PERSPECTIVE

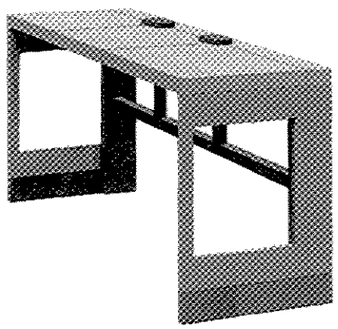

3 A-101/NTS HIGH (STAND-UP) TABLE PERSPECTIVE

AS BUILT INFORMATION

BENCH MARKS

SURVEY INFORMATION
Field Notes

ENGINEER'S STAMP & SIGNATURE

ASCG INCORPORATED

nbbj
223 Yale Avenue North
Seattle, Washington 98109
p(206) 223-5555
f(206) 621-2304

CITY OF ALBUQUERQUE
PUBLIC WORKS DEPARTMENT
ENGINEERING DEVELOPMENT GROUP

TITLE: ALBUQUERQUE INTERNATIONAL AIRPO
TP1-TP2
COMPUTER TABLES LOCATION

Design Review Committee	City Engineer Approval	Last Design Update
City Project No.	Zone Map No.	Drawing No. A101

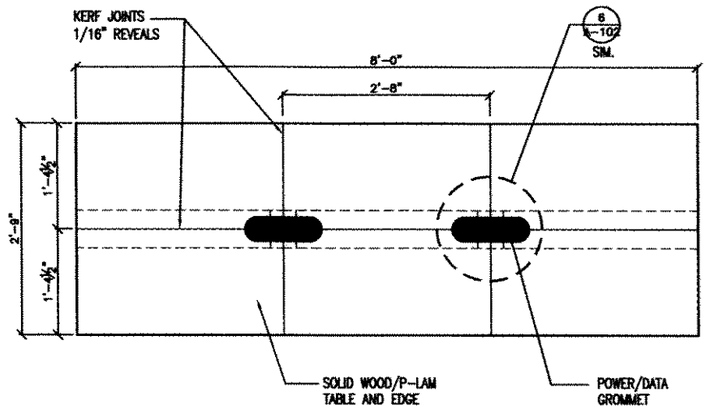

1 LOW (SIT-DOWN) TABLE PLAN
A-102/1" = 1'-0"

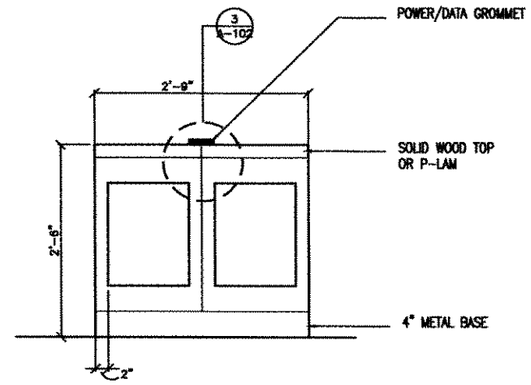

2 LOW (SIT-DOWN) TABLE SIDE ELEVATION
A-102/1" = 1'-0"

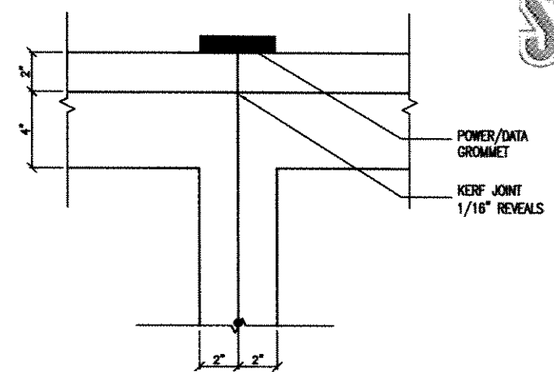

3 LOW (SIT-DOWN) TABLE SIDE DETAIL
A-102/3"= 1'-0"

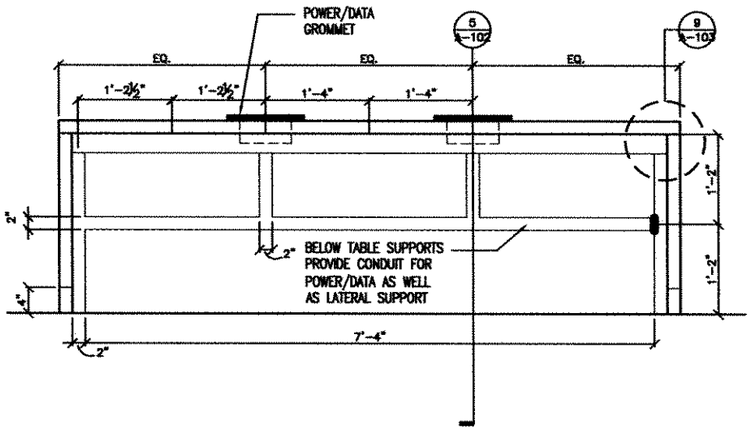

4 LOW (SIT-DOWN) TABLE FRONT ELEVATION
A-102/1" = 1'-0"

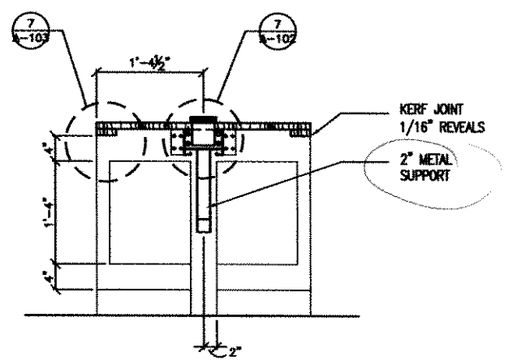

5 LOW (SIT-DOWN) TABLE SECTION
A-102/1" = 1'-0"

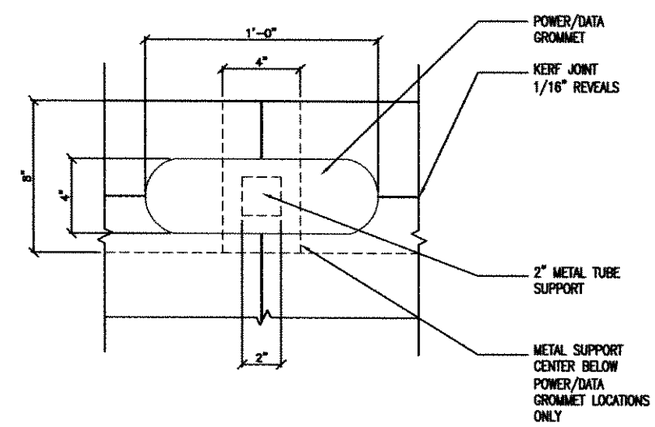

6 TABLE GROMMET PLAN DETAIL
A-102/3"= 1'-0"

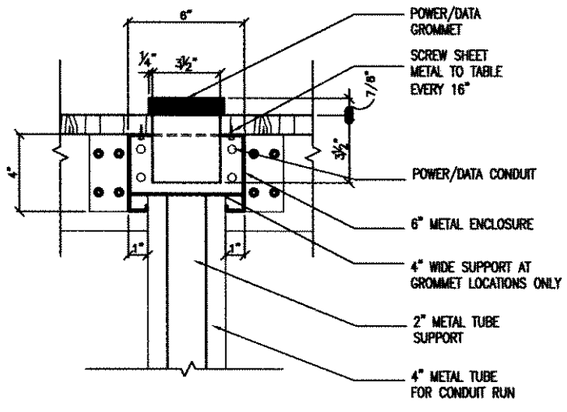

7 LOW (SIT-DOWN) TABLE DETAIL
A-102/3"= 1'-0"

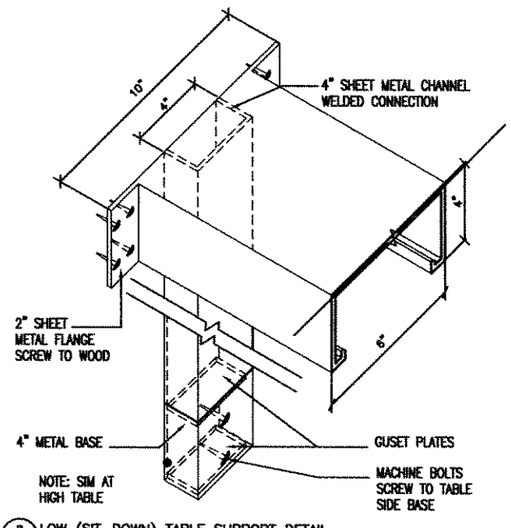

8 LOW (SIT-DOWN) TABLE SUPPORT DETAIL
A-102/3"= 1'-0"

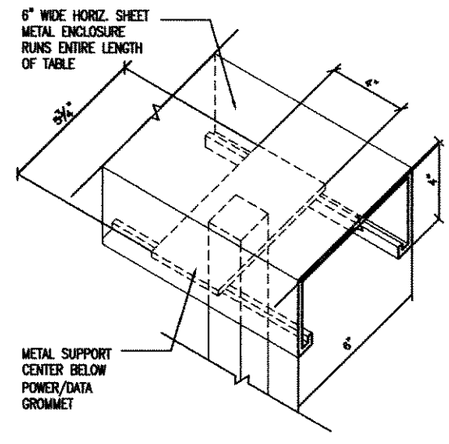

9 LOW (SIT-DOWN) TABLE GROMMET SUPPORT DETAIL
A-102/3"= 1'-0"

ABQ SUNPORT

AS BUILT INFORMATION

BENCH MARKS

SURVEY INFORMATION

SIGNATURE

ENGINEER'S STAMP & SIGNATURE

ASCG
INCORPORATED
ENGINEERS · ARCHITECTS · SURVEYORS · PLANNERS
6501 AMERICAN PARKWAY NE, SUITE 400
ALBUQUERQUE, NEW MEXICO 87110-8272
PHONE 505.347.0004 · FAX 505.345.4046

nbbj
223 Yale Avenue North
Seattle, Washington 98109
p(206) 223-5555
f(206) 621-2304

CITY OF ALBUQUERQUE
PUBLIC WORKS DEPARTMENT
ENGINEERING DEVELOPMENT GRO

TITLE: ALBUQUERQUE INTERNATIONAL AI
TP1-TP2
LOW (SIT-DOWN) COMPUTE

Design Review Committee	City Engineer Approval	Last Design Update

City Project No.	Zone Map No.	Drawing No.
		A102

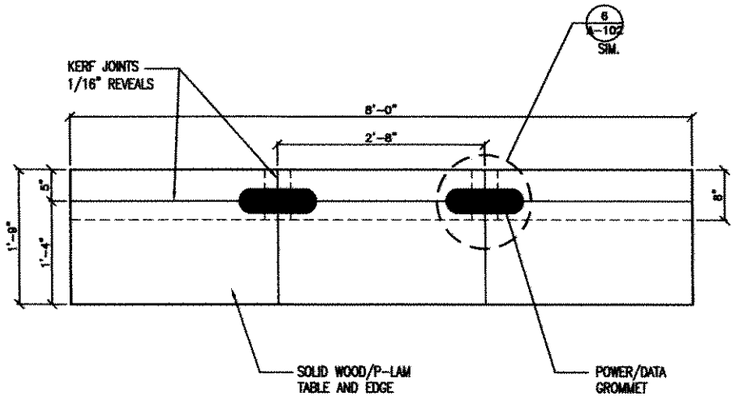

1 HIGH (STAND-UP) TABLE PLAN
A-103/1" = 1'-0"

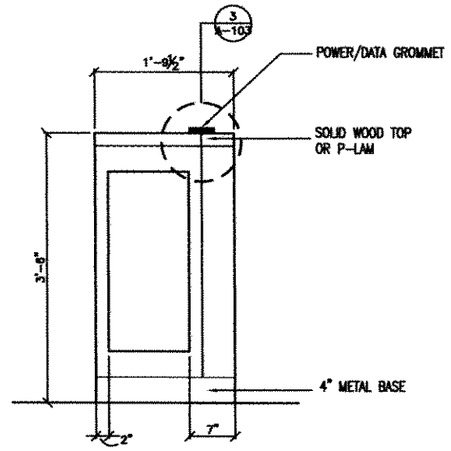

2 HIGH (STAND-UP) TABLE SIDE ELEVATION
A-103/1" = 1'-0"

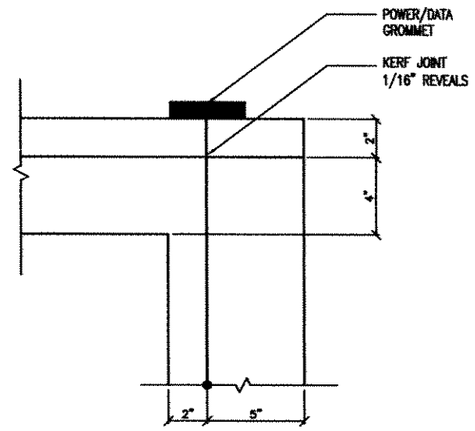

3 HIGH (STAND-UP) TABLE SIDE DETAIL
A-103/3"= 1'-0"

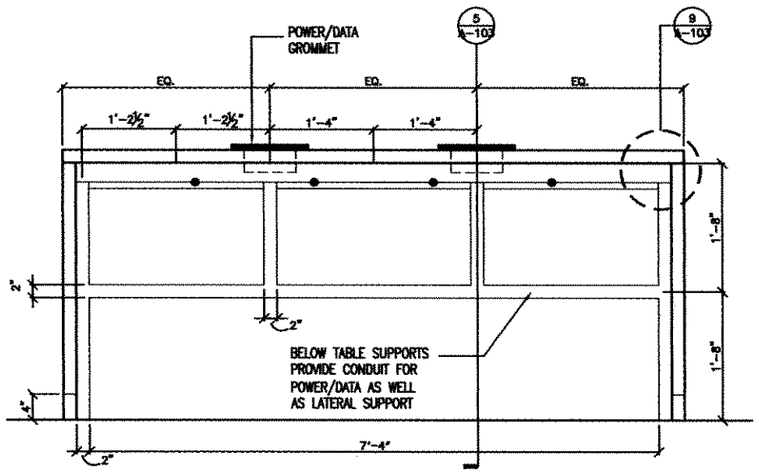

4 HIGH (STAND-UP) TABLE FRONT ELEVATION
A-103/1" = 1'-0"

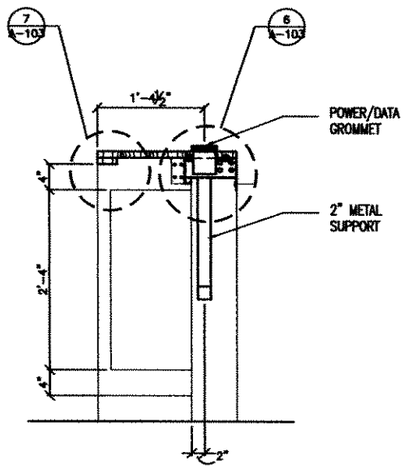

5 HIGH (STAND-UP) TABLE SECTION
A-103/1" = 1'-0"

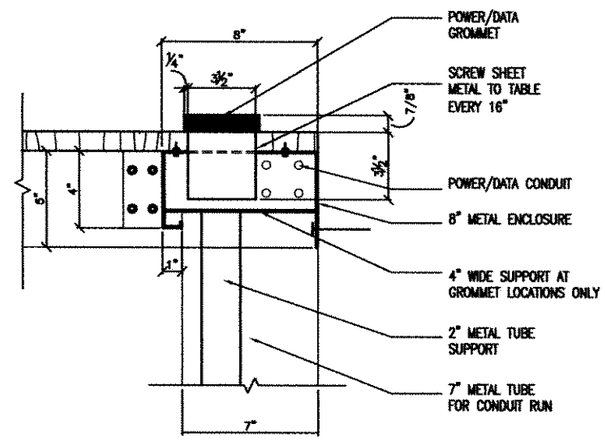

6 HIGH (STAND-UP) TABLE DETAIL
A-103/3"= 1'-0"

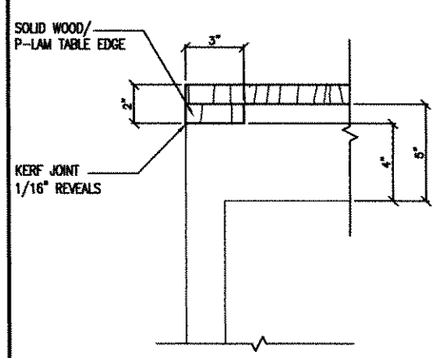

7 TABLE FRONT EDGE DETAIL
A-103/3"= 1'-0"

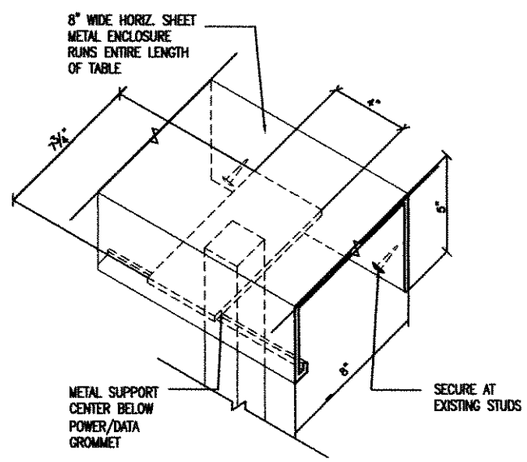

8 HIGH (STAND-UP) TABLE GROMMET DETAIL
A-103/3"= 1'-0"

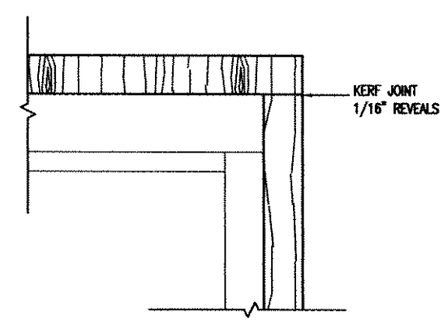

9 TABLE FRONT EDGE DETAIL
A-103/3"= 1'-0"

ABQ SUPPORT

AS BUILT INFORMATION | BENCH MARKS | SURVEY INFORMATION | ENGINEER'S STAMP & SIGNATURE

ASCG
INCORPORATED
ARCHITECTS · ENGINEERS · STRUCTURAL · PLANNERS
6501 AMERICAN PARKWAY NE, SUITE 400
ALBUQUERQUE, NEW MEXICO 87110-8272
PHONE 505.247.0004 · FAX 505.242.4945

nbbj
223 Yale Avenue North
Seattle, Washington 98109
p(206) 223-5555
f(206) 621-2304

CITY OF ALBUQUERQUE
PUBLIC WORKS DEPARTMENT
ENGINEERING DEVELOPMENT GR

TITLE: ALBUQUERQUE INTERNATIONAL A
TP1-TP2
HIGH (STAND-UP) COMPUTE

Design Review Committee	City Engineer Approval	Last Design Update
City Project No.	Zone Map No.	Drawing No. A103